Panasonic

Operating Instructions

Error Code List

High-Speed Axial Lead Component Insertion Machine

AV131

Model No. **NM-EJA2A**
NM-EJA3A

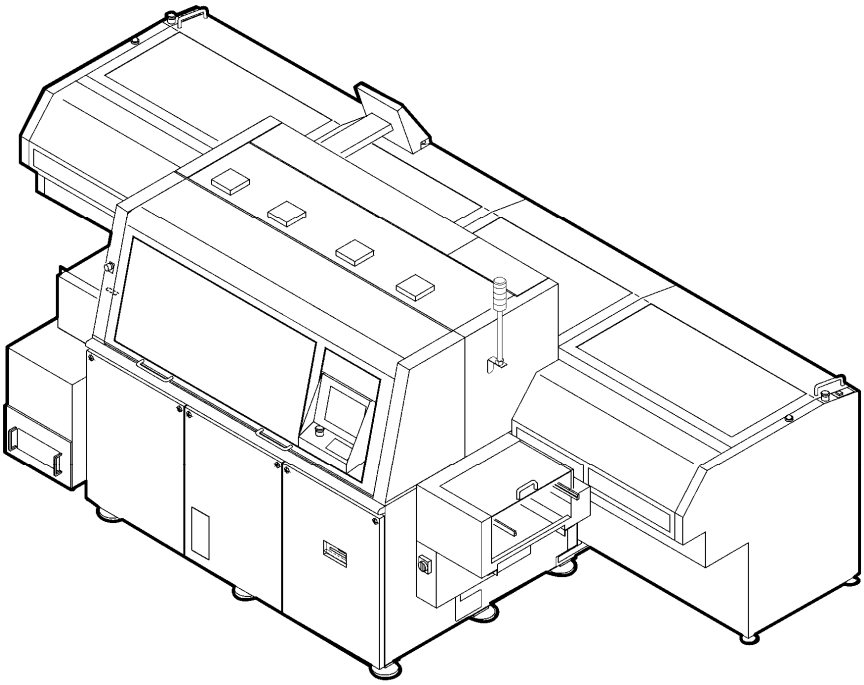

Thank you for purchasing AV131, the high-speed axial lead component insertion machine.
Before placing the machine in service, be sure to read the instruction manual for proper usage.
After that, store it carefully and read it if necessary.

N7201A236E00

Marking Samples for Product Safety

Identification for HHS (U.S.A.)
Manufactured: xxxx(xx),xxxx
Panasonic Factory Solutions Co., Ltd.
Kadoma, Osaka, 571-8502, Japan
Certification for HHS (U.S.A.)
Complies with FDA radiation performance standards, 21 CFR Sub-chapter J.
PS0004E2

HHS-Mark for U.S.A.

CE
TÜV PRODUCT SERVICE
Classification of ISM equipment: Group 1 Class A
Panasonic Factory Solutions Co., Ltd.
Kadoma, Osaka, 571-8502, Japan
PS0002E2

CE-Mark

USAGE OF WARNING SHEETS IN MAINTENANCE

Before performing maintenance, affix the included warning sheets (see below) to prominent positions, such as the operating panel or the vicinity of it, for safety.
During the maintenance by two or more persons in particular, as well as using these warning sheets to ensure safety, be sure to send signals to each other.

This warning sheet uses a magnet. Do not use it or store it near magnetic media or any other items susceptible to magnetic influence.

Use of this machine:
This machine is designed and constructed to be used for placing electric and electronic components on PCB.
This machine shall be used for this purpose only.

It shall not be used for any other purpose.

Operation of this machine:
This machine shall be operated by professional, specially trained operators.

It shall not be operated by non-professional, not specially trained operators.

Regarding the training course, please contact Panasonic Factory Solutions Co., Ltd. or PFSE.

⚠ WARNING

Do not allow any person who has not received special training to operate the machine.

Prohibition

The machine many be operated improperly, causing injury.

- Either carry out training by yourself of consult us.

Machine was manufactured by: Panasonic Factory Solutions Co., Ltd.

441-13, Nagahasu, Tateishi-cho, Tosu, Saga 841-8585, Japan
Phone number: +81-942-84-2644
Fax number: +81-942-84-2636

For Service and Supply of Spares in Europe
you may contact Panasonic Europe:

Continental Europe
PFSE
Panasonic Factory Solutions Europe
Winsbergring 15
22525 HamburgGermany
Phone number: 0049-(0)40-85386-321
Fax number: 0049-(0)40-85386-332

United Kingdom
PFSE
Panasonic Factory Solutions Europe
Panasonic House,Willoughby Road
Bracknell, Berks. RG12 8 FP
Phone number: 0044-(0)1344-853267
Fax number: 0044-(0)1344-425970

Year: 2008 CE

D79HJC-02-010-A0

Table of Contents

1. INTRODUCTION 1-1
1.1. How to Use This Manual 1.1-1
1.1.1 Document Summary 1.1-1
1.1.2 Conventions Used 1.1-2
2. ERROR CODES 2-1
2.1. Self-diagnosis 2.1-1
2.1.1 Self-diagnosis before Starting Operation 2.1-1
2.2. Overview of Error Messages 2.2-1
2.2.1 Error Message Display Screen 2.2-1
2.2.2 How This Manual Is Organized 2.2-2
2.3. Error Code Table 2.3-1
2.4. Errors 2.4-1

1. INTRODUCTION

This chapter describes how to use this manual.

1.1. How to Use This Manual

D79EEC-06-010-A0

1.1.1 Document Summary

This section describes how the AV131 Operating Instructions are organized.

Operation Manual
Describes the guidelines for basic operations.

1. INTRODUCTION
2. SAFETY PRECAUTIONS
3. DESCRIPTION
4. START/STOP
5. PROCEDURE FOR PRODUCTION (BASICS)
6. TROUBLESHOOTING

Programming Manual
Discusses the method of creating various programs.

1. INTRODUCTION
2. DATA CREATION
3. NC DATA CREATION
4. PART DATA CREATION
5. P.C.B. DATA CREATION
6. P.C.B. RECOGNITION DATA CREATION
7. DATA CHECK PROCEDURE
8. FILE MANAGING

Reference Manual
Offers helpful information clarifying unclear points you may encounter in operating the equipment.

1. INTRODUCTION
2. OVERVIEW
3. VARIOUS FUNCTIONS
4. SCREEN TRANSITION
5. PRODUCTION MANAGEMENT INFORMATION
6. SYSTEM MANAGEMENT

Maintenance Manual
Provides essential information for performing routine maintenance.

1. INTRODUCTION
2. SAFETY PRECAUTIONS
3. INSTALLATION
4. CONTROL SYSTEM
5. SENSOR LAYOUT
6. PREPARED MATERIALS
7. INSPECTION
8. MAINTENANCE GUIDE
9. SYSTEM CHECK FUNCTIONS
10. RECYCLING
11. APPENDIX

Error Code List
Contains organized error codes to be displayed when troubles occur.

1. INTRODUCTION
2. ERROR CODES

1.1.2 Conventions Used

■ Buttons, Keys and Switches

For buttons, keys and switches, this manual uses the following conventions for description of the procedure except for the functions or roles of this machine.

Name	Explanation	Indication example	Symbol	Example of use
Button	Pressed on the screen.	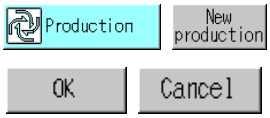	[ ]	[Production], [New production], [OK], [Cancel], etc.
Key	Used to input characters and numbers. (Keyboard)			[ESC], [BS], [ENT], etc.
	Used to move the camera etc. (Teaching keys)	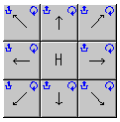		[H], etc.
Switch	Used in operation other than on the screen (e.g., on control panel, sub-control panel, power-control panel).		< >	<START>, <STOP>, <ENABLING>, <PARTS EXCHANGE>, etc.

(Note) < ENABLING > + <START> indicates that you should press <START> with < ENABLING > held down.

Icons or buttons are used to show keys with no name, etc. (e.g. function keys, scroll buttons).

Function key	
Scroll button	

■ Screen Display

Item	Indication example	Symbol	Example of use
Screen name or on-screen item	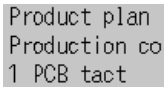	“ ”	“Product plan”
Message	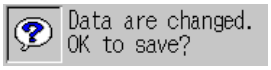		“Data are changed. OK to save?”

■ Cautionary Statements

Cautionary statements and cross-references are entitled or marked with an icon as follows:

Notation	Meaning
=REMARKS=	Matters requiring attention in operation
=HINT=	Helpful suggestions or available operations other than those described here
=📖=	Supplementary information for learning more about operations

These titles may be numbered as ‘=HINT=1’ in figures and footnoted.

■ Abbreviations

The names of the referential manuals are abbreviated as follows:

Ope.: Operation Manual Ref.: Reference Manual
Prg.: Programming Manual Mtn.: Maintenance Manual

The manuals are cross-referenced with the notation ‘Manual Name / Chapter Title / Section Title’.
Ex.) =📖= Refer to ‘Ope. / VARIOUS FUNCTIONS / Move Axis’ for details.

2. ERROR CODES

This chapter summarizes the error messages, possible cause of the errors and countermeasures.

2.1. Self-diagnosis

D79EEC-91-220-A0

The AV131 performs self-diagnostic checks when power is turned ON. If any error message appears on the Self-diagnosis screen, take appropriate action according to the following.

2.1.1 Self-diagnosis before Starting Operation

Error code	Message	Cause	Solution
None	Handle detection	● The cam rotation handles has been pushed in.	● Pull back the cam rotation handle.
None	Right rail traverse limit	● The right rail may have been lowered. ● The sensor may be defective.	● Return the right rail to the upper position. ● Check the condition of the sensor.
None	Left rail traverse limit	● The right rail may have been lowered. ● The sensor may be defective.	● Return the left rail to the upper position. ● Check the condition of the sensor.
None	No M.ORG	● The camshaft has been stooped at a position other than the machine origin.	● Return the camshaft to the machine origin.
None	No NC data	● NC data not selected in the production setting.	● Select an NC data file from the production setting menu.
None	No Part data	● Part data not selected in the production setting.	● Select a part data file from the production setting menu.
None	No PCB data	● Part data not selected in the production setting.	● Select a PCB file from the production setting menu.
None	NC data contents abnormal	● There may be invalid values in the NC data.	● Check the contents of data on the NC data edit screen.
None	Parts data contents abnormal	● There may be invalid values in the parts data.	● Check the contents of data on the Parts data edit screen.
None	PCB data contents abnormal	● There may be invalid values in the PCB data.	● Check the contents of data on the PCB data edit screen.
None	No insert step	● There may be no insertion steps in the selected NC data.	● Check the contents of the NC data.
None	No Loader origin	● The transfer rail may be out of its return limit. ● The left/right rails may be out of their return limits.	● Check the return limit of the transfer arm. ● Check the return limits of the left/right rails.
None	Transfer arm traverse limit	● The transfer arm may have been stopped at the traverse limit.	● Move the transfer arm to the return limit.
None	H brake SW	● The H brake switch has been set to the Release position.	● Set the H brake switch to the Lock position.
None	H brake SW release OFF	● Brake may have been applied with the H-axis servo lock engaged.	● Release the H-axis brake.
None	Thermal trip (dust collector)	● Thermal trip may have been occurred on the dust collector.	● Reset the thermal relay of the dust collector.

2.2. Overview of Error Messages

D79EEC-91-230-A0

2.2.1 Error Message Display Screen

When an error has occurred on the AV131, messages for the error are displayed on the screen as shown in the below example.

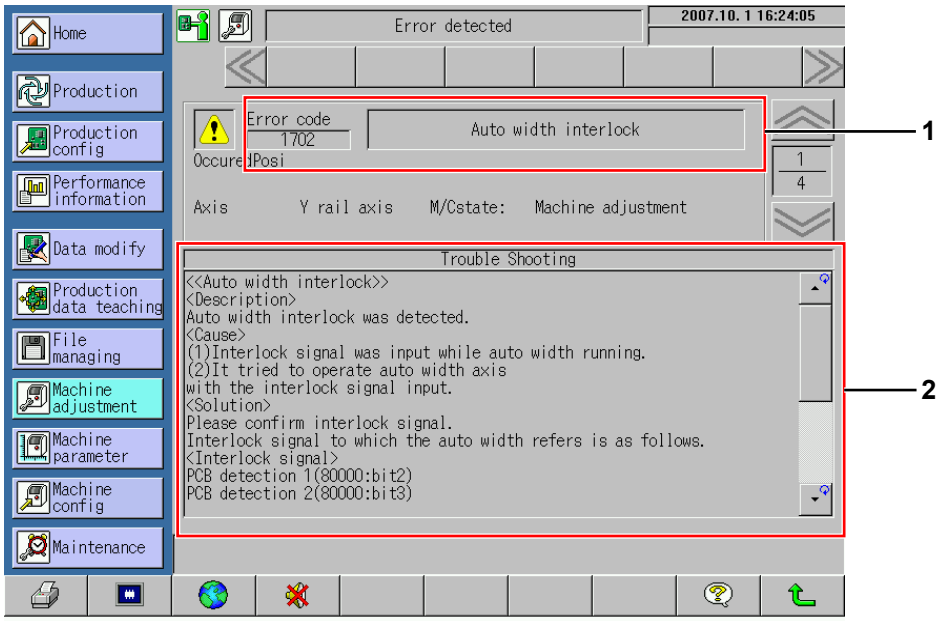

1. Error message area

An error code and a message for the error occurred appear in this area.

2. Troubleshooting area

Description, possible causes and solution to the error occurred are displayed in this area.

=HINT=

The same contents are also included in this manual. Use them when dealing with the errors occurred.

2.2.2 How This Manual Is Organized

This manual consists of the list of error codes and descriptions of errors:

- List of error codes
  Systematically arranged list of error codes
- Description of error
  Provides detailed information such as solution to the error occurred.

Example

List of error codes

Error code	Message
7	Emergency switch ON
8	Servo switch OFF

Description of error

7	Emergency switch ON

DESCRIPTION
- Emergency switch was detected.

CAUSE
- An emergency stop switch was pressed.

SOLUTION
- Release the emergency stop switch. (There are five switches. Front; 2 Rear; 3) If the same message appears after releasing the switch, the switch may be broken. Confirm emergency SW signal in the [Input check] of [Machine adjustment].

NOTE

2.3. Error Code Table

D79EEC-91-030-A0

■ Error Code Table

Error code	Message
7	Emergency switch ON
8	Servo switch OFF
9	Air pressure drop
12	Cover open stop
17	PCB transport error
20	Illegal setting of width of PCB
34	Counter error
35	Returning to origin error
37	Data error (Soft limit)
38	(+) Overrun
39	(-) Overrun
40	Driver error
47	Interlock error
49	Axis controller communication error
51	Conveyor width adjust error
53	Power box over heat
54	CPU box over heat
61	Safety relay error
112	Illegal product data
1203	PCB Recognition Error
1236	Momentary power failure error
1239	Code Error
1250	DriverReadyTimeOut
1300	Emergency stop switch
1301	Servo switch
1302	Cover open
1303	Air pressure
1304	Pre Process Production End
1306	Data check
1307	Thermal trip (Blower)
1310	Driver condition
1314	Safety relay
1316	Thermal trip (Pump)
1516	Driver communication error
1700	XY interlock (Right rail)
1701	XY interlock (Left rail)
1702	Auto width interlock
1703	Air down interlock
1704	Brake switch interlock
1705	Handle interlock
1706	Feeder float interlock (Left)
1707	Feeder float interlock (Right)
1708	Power failure interlock
1709	θH axis plus overrun interlock
1710	θA axis plus overrun interlock

Error code	Message
1711	θA axis minus overrun interlock
1712	V axis plus overrun interlock
1713	V axis minus overrun interlock
1714	X axis plus/minus overrun interlock
1715	Y axis plus/minus overrun interlock
1716	ZL/ZR axes plus overrun interlock
1717	ZL/ZR axes minus overrun interlock
1718	Ring IO communication interlock
1720	Axis Moving interlock
1809	Servo ready off error
1811	(+) Overrun error
1812	(-) Overrun error
1824	Control power under voltage error
1825	Overvoltage error
1826	Under voltage error
1827	Overcurrent error
1828	Overheat error
1829	Overload error
1830	Regenerating overload error
1831	Encoder communication abnormal error
1832	Encoder communication data abnormal error
1833	Position deviation overlimit error
1834	Hybrid deviation overlimit error
1835	Over speed error
1836	Command abnormal error
1837	External scale communication data abnormal error
1838	Deviation counter overflow error
1839	Software limit error
1840	External scale communication abnormal error
1841	EEPROM Parameter abnormal error
1842	EEPROM Check code abnormal error
1843	Drive prohibition input abnormal error
1844	Absolute encoder system breakdown abnormal error
1845	Absolute counter overflow error
1846	Absolute over speed abnormal error
1847	Absolute 1 round counter abnormal error
1848	Absolute multi round counter abnormal error
1849	Absolute status abnormal error
1850	Encoder Z phase abnormal error
1851	Encoder CS signal abnormal error
1852	External scale status 0 error
1853	External scale status 1 error
1854	External scale status 2 error
1855	External scale status 3 error
1856	External scale status 4 error
1857	External scale status 5 error
1858	External scale in addition error
1859	Node address setting abnormal error
1860	Continual communication abnormal error

Error code	Message
1861	Communication timeout abnormal error
1862	Cyclic data reception failure
1863	Emergency stop input
1864	Motor auto-recognition abnormal error
1865	Overload warning
1866	Regenerative overload warning
1867	Battery warning
1868	Continuous communication abnormal warning
1869	Communication abnormal accumulation warning
1870	Update Counter warning
1871	Fan lock warning
1872	External scale warning
1873	Ring communication is not connect
1874	Ring communication time out
1875	Ring communication time out
1876	Communication optical alarm
1877	Controller fan motor life span alarm
1878	Controller fan motor breakdown alarm
1879	AC FAIL detection
1880	Battery low warning
1881	Battery shortage warning
1882	Board temperature overheat error
1883	Keyboard overcurrent alarm
1884	Mouse overcurrent alarm
1885	CPU internal error
1886	CPU battery alarm
1887	CPU thermal alarm
1888	LVDS over current alarm
1889	DVI overcurrent alarm
1890	USB0 overcurrent alarm
1891	USB1 overcurrent alarm
1892	USB2 overcurrent alarm
1893	USB3 overcurrent alarm
1894	USB4 overcurrent alarm
1895	USB5 overcurrent alarm
1896	CF access impossible
1897	Power ON first Safety Stop
1898	Front cover open
1899	Rear cover open
1900	Maintenance mode switching error
1901	Maintenance switch abnormal
2003	PCB carry in restart cancel (right rail belt)
2011	PCB carry in restart cancel (right rail exit)
2012	PCB carry in restart cancel (right rail exit)
2052	PCB carry out restart cancel (left rail belt)
2079	PCB carry out restart cancel (left rail exit)
2209	Rail down condition not satisfies (left rail return limit)
2216	Rail down condition not satisfies (positioner lever return limit)
2221	Rail down condition not satisfies (right rail return limit)

Error code	Message
2223	Rail down condition not satisfies (servo switch)
2225	Rail down condition not satisfies (transfer arm return limit)
2231	Rail down condition not satisfies (XY origin)
2232	Rail down condition not satisfies (XY movement)
2258	Arm carry condition not satisfies (left rail traverse limit)
2270	Arm carry condition not satisfies (right rail traverse limit)
2273	Arm carry condition not satisfies (servo switch)
2275	Arm carry condition not satisfies (transfer arm return limit)
2281	Arm carry condition not satisfies (XY origin)
2282	Arm carry condition not satisfies (XY movement)
2308	Arm slowdown condition not satisfies (left rail traverse limit)
2320	Arm slowdown condition not satisfies (right rail traverse limit)
2323	Arm slowdown condition not satisfies (servo switch)
2331	Arm slowdown condition not satisfies (XY origin)
2332	Arm slowdown condition not satisfies (XY movement)
2358	Rail up condition not satisfies (left rail traverse limit)
2365	Rail up condition not satisfies (positioner lever traverse limit)
2370	Rail up condition not satisfies (right rail traverse limit)
2373	Rail up condition not satisfies (servo switch)
2374	Rail up condition not satisfies (transfer arm traverse limit)
2381	Rail up condition not satisfies (XY origin)
2382	Rail up condition not satisfies (XY movement)
2409	Arm return condition not satisfies (left rail return limit)
2416	Arm return condition not satisfies (positioner return limit)
2421	Arm return condition not satisfies (right rail return limit)
2424	Arm return condition not satisfies (transfer arm traverse limit)
2451	Right rail belt motor timeout
2452	Left rail belt motor timeout
2453	Right rail down movement timeout
2454	Right rail up movement timeout
2455	Left rail down movement timeout
2456	Left rail up movement timeout
2457	Transfer arm forward movement timeout
2458	Transfer arm return movement timeout
2461	Positioner lever forward movement timeout
2462	Positioner lever return movement timeout
2463	Left rail push forward movement timeout
2464	Left rail push return movement timeout
2551	PCB abnormal detection (right rail)
2552	PCB abnormal detection (left rail)
2641	Encoder error
2643	Servo free error
2645	Brake switch release error
2646	H axis Servo ON error
2647	Handle detection error
2648	No PCB on XY table
2649	Carry miss
2652	Rear left safety detection
2653	Rear right safety detection

Error code	Message
2654	Rear left center safety detection
2655	Rear right center safety detection
2656	Front cover safety detection
2657	Right rail cover safety detection
2658	Left rail cover safety detection
2659	Rear upper cover safety detection
2663	Cancel replacement completion input (open rear left cover)
2664	Cancel replacement completion input (open rear right cover)
2665	Cancel replacement completion input (float left feeder)
2666	Cancel replacement completion input (float right feeder)
2668	Cancel replacement completion input (never open rear left cover)
2669	Cancel replacement completion input (never open rear right cover)
2670	Insertion error (Neither lead detection)
2671	Insertion error (No right lead detection)
2672	Insertion error (No left lead detection)
2673	Anvil short error (left & right lead detection)
2674	Anvil short error (left lead detection)
2675	Anvil short error (right lead detection)
2682	26/52 change error
2696	No PCB on XY table
2697	Feeder type error (26 / 52)
2707	H axis origin off
2708	Feeder float detection error
2710	Safety relay reset condition
2731	PCB carry in restart cancel
2732	PCB carry out restart cancel
2733	PCB sweep out restart cancel
2734	PCB carry start conditional not satisfies
2735	Rail down condition not satisfies
2736	Arm carry condition not satisfies
2737	Arm slowdown condition not satisfies
2738	Rail up condition not satisfies
2739	Arm return condition not satisfies
2748	Emergency stop switch ON safety stop
2756	Axis related error
2757	PCB recognition error (23)
2758	PCB recognition error (16)
2759	PCB recognition error (17)
2760	PCB recognition error (19)
2761	PCB recognition error (45)
2762	PCB recognition error (47)
2763	PCB recognition error (48)
2764	PCB recognition error
2765	PCB recognition error
2766	PCB recognition error
2767	PCB recognition error
4066	This is write protected disk. Please release write protect. Refer to Help for detail.
4067	There is no signature on boot sector. Refer to Help for detail.
9293	Driver soft interlock

Error code	Message
9294	Soft task comm. Error
9295	Soft calculation error
9304	Motion incomplete
9305	Soft parameter error
9308	Soft overrun limit
9369	Exclusion process error
9372	Position interrupt error
9373	Complete interrupt error
9400	Axis error
9801	Auto width power on error
9802	Auto width origin return incomplete
9803	Auto width positioning incomplete
9804	Auto width emergency stop input
9805	Auto width command error
9806	Auto width parameter error
9807	Auto width communication error
9809	Auto width origin abnormal
9812	Auto width + overrun error
9813	Auto width - over run error

2.4. Errors

D79EEC-91-210-A0

7	Emergency switch ON

DESCRIPTION
- Emergency switch was detected.

CAUSE
- An emergency stop switch was pressed.

SOLUTION
- Release the emergency stop switch. (There are five switches. Front; 2 Rear; 3) If the same message appears after releasing the switch, the switch may be broken. Confirm emergency SW signal in the [Input check] of [Machine adjustment].

NOTE

8	Servo switch OFF

DESCRIPTION
- Servo switch off

CAUSE
- A servo switch is pressed.

SOLUTION
- Release the servo switch (1 in front and 1 in back). (KEYLOCK LED of operation panel turns OFF.)
- If the same message appears after releasing the switch, the switch may be broken.

NOTE

9	Air pressure drop

DESCRIPTION
- Air pressure drop

CAUSE
- Air pressure has dropped.

SOLUTION
- When supplied air pressure has dropped, supply air at 0.49MPa - 0.78MPa.
- Excessively high setting of the air pressure detector causes an error. Set to 0.4MPa.
- Confirm Air pressure (5800H:bit2) in the [input check] of [machine adjustment]. ON: OK, OFF: Drop

NOTE

12	Cover open stop

DESCRIPTION
- Door or cover is open

CAUSE
- Safety cover is left open.

SOLUTION
- Close the door or cover, then push [return].
- Confirm Cover switch (5800H:bit3, 4, 5) in the [input check] of [machine adjustment]. ON: Close, OFF: Open

NOTE

17	PCB transport error

DESCRIPTION
- PCB remains at the transferring part, or PCB is broken.

CAUSE
- PCB cannot be transferred properly.

SOLUTION
- Check the PCB transfer unit for proper operation.

NOTE

20	Illegal setting of width of PCB

DESCRIPTION
- An obstacle was detected during the width adjustment of the conveyors.

CAUSE
- The width of the PCB on the PCB data can be wrong or the holder position can be set in excess of PCB width.

SOLUTION
- If a holder is outside the PCB dimension in the conveyor Y direction, move the pin to its correct position.
- Check that the support pin detection sensor (PH530, PH531) turns on or off properly.
- If obstacles exist, remove them.

NOTE

34	Counter error

DESCRIPTION
- Counter error of axis controller

CAUSE
- Trouble of axis controller board in CPU box

SOLUTION
- Necessary to exchange axis controller board.
- Please inform us the axis name and the situation.

NOTE

35	Returning to origin error

DESCRIPTION
- Incomplete returning to origin

CAUSE
- Axis can't move smoothly.
- Motor driver trouble
- Trouble of axis controller board in CPU box
- Getting loose of motor coupling
- Disconnection of motor wiring
- Trouble of axis I/O sensor

SOLUTION
- Inspection of axis. (Dust etc.)
- Exchange motor driver.
- Exchange axis controller board.
- Confirm I/O sensor status in the [Input check] of [Machine adjustment]. Check 1260H, 1261H, 1262H, 1263H, 9806H, 9816H, 9826H, A006H, A016H, A026H, A806H, A816H, A826H, A836H, B006H, B016H, B026H, B036H.
- Please inform us the axis name and the situation.

NOTE

37	Data error (Soft limit)

DESCRIPTION
- Move data beyond limit is sent to axis controller.

CAUSE
- Move data beyond limit exists in pickup position data and mount data.

SOLUTION
- Check pickup position data and mount data.
- Please inform us the axis name and the situation.

NOTE

38	(+) Overrun

DESCRIPTION
- Axis (+) overrun sensor is ON.

CAUSE
- Trouble of sensor

SOLUTION
- Execute return to origin in the [Ret orig] of [Machine adjustment].
- [Confirm I/O sensor status in the [Input check] of [Machine adjustment].
- Confirm setting of CPU box board (MCMJEX) and connection of connector.
- Please inform us the axis name and the situation.

NOTE

39	(-) Overrun

DESCRIPTION
- Axis (-) overrun sensor is ON.

CAUSE
- Trouble of sensor

SOLUTION
- Execute return to origin in the [Ret orig] of [Machine adjustment].
- Confirm I/O sensor status in the [Input check] of [Machine adjustment].
- Confirm setting of CPU box board (MCMJEX) and connection of connector.
- Please inform us the axis name and the situation.

NOTE

40	Driver error

DESCRIPTION
- A motor driver error was detected

CAUSE
- The motor drive detected an error.

SOLUTION
- Confirm the error code on the 7-segment LED of the motor driver of the axis concerned.
- Turn power OFF and ON, and leave 5 minutes with the main menu displayed. Then, restart the system.
- Contact us along with the axis name, displayed error code and the situation.

NOTE

47	Interlock error

DESCRIPTION
- Unregistered interlock error occurred.

CAUSE
- NC board detected an error of an unregistered axis number.

SOLUTION
- Contact us along with the axis name and the situation.
- If the system cannot be restarted, turn power OFF once and turn it back ON.41307

NOTE

49	Axis controller communication error

DESCRIPTION
- No response from axis controller.

CAUSE
- No response against command to axis controller.

SOLUTION
- Please inform us the axis name and the situation.

NOTE

51	Conveyor width adjust error

DESCRIPTION
- Unable to width adjust because PCB exist on the conveyor.

CAUSE
- Width cannot be adjusted when there is a PCB on the conveyor because it may drop or get caught.

SOLUTION
- Remove PCB.

NOTE

53	Power box over heat

DESCRIPTION
- Temperature in power box is high.

CAUSE
- Temperature in power box is over the reference value.

SOLUTION
- Check fan moving.

NOTE

54	CPU box over heat

DESCRIPTION
- Temperature in CPU box is high.

CAUSE
- Temperature in CPU box is over the reference value.

SOLUTION
- Check fan moving.

NOTE

61	Safety relay error

DESCRIPTION
- Problem occurs in safety relay.

CAUSE
- Safety relay may be faulty.

SOLUTION
- Power OFF and ON. Please inform us situation.

NOTE

112	Illegal product data

DESCRIPTION
- Production data check detects an error in self diagnosis.

CAUSE
- Production data has an error.

SOLUTION
- Check the error item at [Data check] in [Data modification] and correct data.

NOTE

1203	PCB Recognition Error

DESCRIPTION
- A PCB recognition error was detected.

CAUSE
- Insertion position may be incorrect.
- Part may already have been inserted.
- Lighting for recognition may not be lit.

SOLUTION
- Modify the insertion position to the correct coordinates.
- Check the condition of the insertion position.
- Check the condition of the lighting.

NOTE

1236	Momentary power failure error

DESCRIPTION
- Low voltage, power failure, Momentary power failure was detected.

CAUSE
- The voltage of the R-S phase or the S-T phase is lack of phase more than 24ms.

SOLUTION
- Please turn off the main switch and turn on the main switch again. Please confirm the voltage of power supply when the error occurs repeatedly.

NOTE

1239	Code Error

DESCRIPTION
- Software error was occurred.

CAUSE
- Software codes may be abnormal.

SOLUTION
- Call the Servicing Department of our company.

NOTE

1250	DriverReadyTimeOut

DESCRIPTION
- The axis driver condition does not become Ready.

CAUSE
- The axis controller or servo driver may have failed.

SOLUTION
- Call the Servicing Department of our company.

NOTE

1300	Emergency stop switch

DESCRIPTION
- Emergency stop switch is kept pressed.

CAUSE
- Emergency stop signal was detected.

SOLUTION
- Please pull and release the emergency stop switch.

NOTE

1301	Servo switch

DESCRIPTION
- Servo switch is OFF.

CAUSE
- Servo switch OFF signal was detected.

SOLUTION
- Turn ON the servo switch.

NOTE

1302	Cover open

DESCRIPTION
- Cover is open.

CAUSE
- Safety cover is left open.

SOLUTION
- Close the cover.

NOTE

1303	Air pressure

DESCRIPTION
- Air pressure is down.

CAUSE
- Air pressure is lower than the standard value or the air is not supplied.

SOLUTION
- Feed the air at the pressure between 0.49MPa - 0.78MPa.

NOTE

1304	Pre Process Production End

DESCRIPTION
- Ending signal from preceding process has been detected.

CAUSE
- Preceding machine is sending the signal of ending the production.

SOLUTION
- Turn OFF the Ending signal from preceding process.

NOTE

1306	Data check

DESCRIPTION
- ~~Data do not meet the creating condition~~. Data do not satisfy the production condition.

CAUSE
- Data condition required for production is insufficient.

SOLUTION
- Enter the Data modification mode and press the data check key to confirm NG data items. And then change data.

NOTE

1307	Thermal trip (Blower)

DESCRIPTION
- Thermal switch for the blower has detected overcurrent.

CAUSE
- Tripped thermal switch for the blower.

SOLUTION
- Reset the thermal relay.

NOTE

1310	Driver condition

DESCRIPTION
- Trouble is found in the servo driver.

CAUSE
- Servo driver alarm signal was detected.

SOLUTION
- Cancel the driver error.

NOTE

1314	Safety relay

DESCRIPTION
- Safety relay has not been properly reset.

CAUSE
- There are some troubles in the safety relay.

SOLUTION
- Replace the safety relay.

NOTE

1316	Thermal trip (Pump)

DESCRIPTION
- Thermal switch for the Pump has detected overcurrent.

CAUSE
- Thermal switch for the Pump was activated due to overcurrent.

SOLUTION
- Reset the thermal relay.

NOTE

1516	Driver communication error

DESCRIPTION
- Communication with an axial driver went wrong.

CAUSE
- Communication error between the NC board and driver was detected.

SOLUTION
- Call the Servicing Department of our company.

NOTE

1700	XY interlock (Right rail)

DESCRIPTION
- Interlock was detected between XY table and right rail.

CAUSE
- While XY table is moving right rail traverse limit sensor (80000:bit0) was detected.

SOLUTION
- Please confirm whether right rail is down position. Please confirm right rail traverse limit sensor.

NOTE

1701	XY interlock (Left rail)

DESCRIPTION
- Interlock was detected between XY table and left rail.

CAUSE
- While XY table is moving left rail traverse limit sensor (80040:bit4) was detected.

SOLUTION
- Please confirm whether left rail is down position. Please confirm left rail traverse limit sensor.

NOTE

1702	Auto width interlock

DESCRIPTION
- Auto width interlock was detected.

CAUSE
- Interlock signal was input while auto width running.
- It tried to operate auto width axis with the interlock signal input.

SOLUTION
- Please confirm interlock signal. Interlock signal to which the auto width refers is as follows.
  <Interlock signal> PCB detection 1 (80000:bit2) PCB detection 2 (80000:bit3) PCB detection 3 (80040:bit6) PCB detection 4 (80040:bit7) XY table PCB detection (80003:bit0)
  Right belt motor output (Positive rotation 80020:bit2) (Reverse rotation 80020:bit3)
  Left belt motor output (Positive rotation 80060:bit2) (Reverse rotation 80060:bit3)
  Safety cover (80581:bit0/bit1/bit2/bit3) Emergency input (80581:bit4/bit5/bit6/bit7)
  XY axis origin (NC origin) H axis origin (M.ORG)

NOTE

1703	Air down interlock

DESCRIPTION
- Air pressure was down.

CAUSE
- Air down sensor (80002:bit5) was detected while machine was running.

SOLUTION
- Please confirm whether the air pressure is correct.

NOTE

1704	Brake switch interlock

DESCRIPTION
- H axis brake switch became a release side.

CAUSE
- Brake SW input (80081:bit5) was release side while H axis was running.

SOLUTION
- Please switch the brake switch to a lock side.

NOTE

1705	Handle interlock

DESCRIPTION
- Pushing H axis rotation wheel was detected.

CAUSE
- H axis wheel detection (800C3:bit2) was detected while H axis was running.

SOLUTION
- Please return H axis rotation wheel to original position.

NOTE

1706	Feeder float interlock (Left)

DESCRIPTION
- Feeder float interlock of left part supply unit was detected.

CAUSE
- ZL feeder float detection sensor (80041:bit1) was detected while ZL axis was running.

SOLUTION
- Please confirm the setting of part supply unit left feeder.

NOTE

1707	Feeder float interlock (Right)

DESCRIPTION
- Feeder float interlock of right part supply unit was detected.

CAUSE
- ZR feeder float detection sensor (80001:bit6) was detected while ZR axis was running.

SOLUTION
- Please confirm the setting of part supply unit right feeder.

NOTE

1708	Power failure interlock

DESCRIPTION
- The power failure was detected while the machine was running.

CAUSE
- Power failure (80580:bit7) was detected while the machine was running.

SOLUTION
- Please turn power failure reset signal (805A0:bit7) on and off by the [Output check] of [Machine adjustment] to reset power failure.

NOTE

1709	θH axis plus overrun interlock

DESCRIPTION
- The plus overrun interlock of the θH axis was detected.

CAUSE
- θH plus overrun (800C1:bit2) was detected while the θH axis was running. θH axis is located near mechanical stopper.

SOLUTION
- Please confirm θH plus overrun detection. Please confirm θH axis position.

NOTE

1710	θA axis plus overrun interlock

DESCRIPTION
- The plus overrun interlock of the θA axis was detected.

CAUSE
- θA plus overrun (80041:bit4) was detected while the θA axis was running. θA axis is located near mechanical stopper.

SOLUTION
- Please confirm θA plus overrun detection. Please confirm θA axis position.

NOTE

1711	θA axis minus overrun interlock

DESCRIPTION
- The minus overrun interlock of the θA axis was detected.

CAUSE
- θA minus overrun (80041:bit6) was detected while the θA axis was running. θA axis is located near mechanical stopper.

SOLUTION
- Please confirm θA minus overrun detection. Please confirm θA axis position.

NOTE

1712	V axis plus overrun interlock

DESCRIPTION
- The plus overrun interlock of the V axis was detected.

CAUSE
- V plus overrun (80082:bit0) was detected while the V axis was running. V axis is located near mechanical stopper.

SOLUTION
- Please confirm V plus overrun detection. Please confirm V axis position.

NOTE

1713	V axis minus overrun interlock

DESCRIPTION
- The minus overrun interlock of the V axis was detected.

CAUSE
- V minus overrun (80082:bit2) was detected while the V axis was running. V axis is located near mechanical stopper.

SOLUTION
- Please confirm V minus overrun detection. Please confirm V axis position.

NOTE

1714	X axis plus/minus overrun interlock

DESCRIPTION
- The plus/minus overrun interlock of the X axis was detected.

CAUSE
- X plus/minus overrun (80582:bit5) was detected while the X axis was running. X axis is located near mechanical stopper.

SOLUTION
- Please confirm X plus/minus overrun detection. Please confirm X axis position.

NOTE

1715	Y axis plus/minus overrun interlock

DESCRIPTION
- The plus/minus overrun interlock of the Y axis was detected

CAUSE
- Y plus/minus overrun (80582:bit4) was detected while the Y axis was running. Y axis is located near mechanical stopper.

SOLUTION
- Please confirm Y plus/minus overrun detection. Please confirm Y axis position.

NOTE

1716	ZL/ZR axes plus overrun interlock

DESCRIPTION
- The plus overrun interlock of the ZL/ZR axes was detected.

CAUSE
- ZL/ZR plus overrun (80582:bit7) was detected while the ZL/ZR ax was running. ZL/ZR axes is located near mechanical stopper.

SOLUTION
- Please confirm ZL/ZR plus overrun detection. Please confirm ZL/ZR axes position.

NOTE

1717	ZL/ZR axes minus overrun interlock

DESCRIPTION
- The minus overrun interlock of the ZL/ZR axes was detected.

CAUSE
- ZL/ZR minus overrun (80582:bit6) was detected while the ZL/ZR ax was running. A ZL/ZR ax is located near mechanical stopper.

SOLUTION
- Please confirm ZL/ZR minus overrun detection. Please confirm ZL/ZR axes position.

NOTE

1718	Ring IO communication interlock

DESCRIPTION
- RING IO communication interlock was detected.

CAUSE
- There is a possibility of coming off and the disconnection of the RING communication optical cable.

SOLUTION
- Please confirm the RING communication optical cable.

NOTE

1720	Axis Moving interlock

DESCRIPTION
- Direct start signal was off while axes was running.

CAUSE
- Axis was not completed within its timing by the axis moving delay.
- Direct start signal was off due to the power failure.
- The direct start signal was off by the disconnection of cycle timer rotary encoder.

SOLUTION
- Please confirm the axis where the error display. Please confirm axis movement is smooth, and confirm there is no groan or Vibration.
- Please release the power failure and restart operation.
- Please confirm the state of the rotary encoder.

NOTE

1809	Servo ready off error

DESCRIPTION
- The axis where the error occurred is not in NC ready status.

CAUSE
- Ready input signal for the servo amplifier or NC board remains OFF.

SOLUTION
- Check the condition of the servo amplifier, motor and NC/IO board.

NOTE

1811	(+) Overrun error

DESCRIPTION
- Plus limit sensor for the axis where the error occurred was turned ON.

CAUSE
- Plus limit sensor input was detected while the axis was moving (including starting to move) in the positive direction for positioning or teaching.

SOLUTION
- Close the error screen and move the axis in the negative direction. Or returning the axis to its origin also will do.

NOTE

1812	(-) Overrun error

DESCRIPTION
- Minus limit sensor for the axis where the error occurred was turned ON.

CAUSE
- Minus limit sensor input was detected while the axis was moving (including starting to move) in the negative direction for positioning or teaching.

SOLUTION
- Close the error screen and move the axis in the positive direction. Or returning the axis to its origin also will do.

NOTE

1824	Control power under voltage error

DESCRIPTION
- Voltage between the terminals P and N of the control power converter dropped to below the rated value.

CAUSE
- Low power supply voltage. Instantaneous power failure occurred.
- Insufficient power capacity (Voltage dropped due to rush current at main power ON.)
- Faulty servo amplifier (circuit).

SOLUTION
- Measure the line voltage between the connectors (L1C, L2C) and terminal blocks (r, t).
  (1) Increase the power voltage capacity. Change the power supply.
  (2) Increase the power capacity.
  (3) Replace the servo amplifier with a new one.

NOTE

1825	Overvoltage error

DESCRIPTION
- Power voltage has exceeded the allowed input voltage range. (Voltage between the terminals P and N of the control power converter has exceeded the rated value.)

CAUSE
- Regenerative resistor is disconnected.
- Regenerative energy cannot be absorbed due to improper external regenerative resistor.
- Faulty servo amplifier (circuit).

SOLUTION
- Measure the line voltage of the connectors (L1, L2, L3). Input the voltage properly.
  (1) Measure the resistance of the resistor externally installed between the terminals P and B of the servo amplifier using a tester. If the value is ∞ (infinite), wire is broken. Replace the external resistor.
  (2) Change to the specified regenerative resistance value and wattage.
  (3) Replace the servo amplifier with a new one.

NOTE

1826	Under voltage error

DESCRIPTION
- Instantaneous interruption between L1-L3 lasted longer than the time set by the main power off detection time. Or voltage between P and N of the main power converter dropped to below the rated value when the servomotor was ON.

CAUSE
- Low power supply voltage.
- Instantaneous power failure occurred.
- Insufficient power capacity (Voltage dropped due to rush current at main power ON.)
- Open phase (Servo amplifier with 3-phase input spec. was operated with single-phase power.)
- Faulty servo amplifier (circuit).

SOLUTION
- Measure the line voltage of the connectors (L1, L2, L3).
  (1) Increase the power voltage capacity. Change the power supply. Eliminate the cause of failed electromagnetic contactor and turn power back ON.
  (2) Check the setting time of main power OFF detection time. Set each phase of the power supply correctly.
  (3) Increase the power capacity.
  (4) Connect each phase (L1, L2, L3) of the power supply correctly.
  (5) Replace the servo amplifier with a new one.

NOTE

1827	Overcurrent error

DESCRIPTION
- Current exceeding rated value of the converter flowed.

CAUSE
- Faulty servo amplifier (Defective parts in the circuit or IGBT)
- Short-circuit occurred in the motor wire terminals U, V and W.
- Ground fault occurred in the motor wire.
- The motor burnt out.
- The motor wire in poor contact.
- The relay of the dynamic of brake welded due to frequent ON/OFF of the servo amplifier.
- Mismatch between the motor and servo amplifier.
- Start command is input simultaneously with or earlier than the servo ON timing.

SOLUTION
- Disconnect the motor wire and turn ON the servomotor. If the same error reoccurs immediately, replace the servo amplifier with a new one (or the one that is running properly).
- Check the connector lead wires at the motor terminals U, V and W for any whisker that may cause short-circuit. Reconnect the motor wires.
- Check the insulation resistance between the motor terminals U/V/W and grounding wire. In case of an insulation failure, replace the motor.
- Check the resistance of the motor between the lines for proper balance. If not balanced, replace the motor.
- Check the connector pins at the motor terminals U, V and W. If loose or missing, secure them in place.
- Replace the servo amplifier. Do not turn ON/OFF the servo to start/stop the amplifier.
- Check the product number (capacity) of the motor/servo amplifier on the nameplate and change to the motor applicable to the servo amplifier. Change the command timing so that the start command will be input more than 100 ms after the servo ON.

NOTE

1828	Overheat error

DESCRIPTION
- Temperature of the radiator or power elements in the servo amplifier have exceeded the rated value.

CAUSE
- Ambient temperature of the servo amplifier has exceeded the rated value.
- Overloaded

SOLUTION
- Check the ambient temperature of the servo amplifier and remedy the cooling conditions.
- Increase the servo amplifier/motor capacity. Increase the acceleration/deceleration time. Reduce load.

NOTE

1829	Overload error

DESCRIPTION
- Working value of the torque command has exceeded the overload level.

CAUSE
- The unit was activated for a long time with heavy load and the effective torque exceeded the rated torque.
- Oscillation or hunting occurred due to improper adjustment of gain. Motor vibrations or abnormal sound occurred. Improper inertia ratio setting.
- Improper or broken motor wiring
- The machine hit against something or became sluggish suddenly. Distortion of machine.
- Electromagnetic brake has been left applied.
- Motor cable misconnected to another axis when multiple units are connected.

SOLUTION
- Check the torque (current) waveform for oscillation or strong vertical fluctuation. Check the warning message for overload and load factor.
  (1) Increase the servo amplifier/motor capacity. Increase the acceleration/ deceleration time or reduce the load. Reduce load.
  (2) Readjust the gain.
  (3) Connect the wiring of the motor according to the wiring diagrams. Replace the cable.
  (4) Correct the distortion of machine. Reduce load.
  (5) Measure the voltage at the electromagnetic brake terminal. Release the electromagnetic brake.
  (6) Perform wiring properly so that the motor cable and encoder cable may be connected one-one-one to the amplifier.

NOTE

1830	Regenerating overload error

DESCRIPTION
- The regenerative energy has exceeded the processing capacity of the regenerative resistor.

CAUSE
- Regenerative energy in deceleration due to large inertia caused the converter voltage to rise. Also, insufficient absorption of regenerative resistance energy further raised the voltage.
- The regenerative energy cannot be absorbed within the prescribed deceleration time because of high number of motor rotations.

SOLUTION
- Check the operation pattern (Speed monitor). Check the regenerative resistor load factor and warning message for regenerative overload. Increase the motor/servo amplifier capacity. Slack up acceleration/ deceleration time. Provide an external regenerative resistor.
- Decrease the motor rotations.

NOTE

1831	Encoder communication abnormal error

DESCRIPTION
- Data from the encoder caused communication error.

CAUSE
- Communication between the encoder and servo amplifier was interrupted at a certain count and breaking detection function activated.

SOLUTION
- Connect the encoder cable according to the wiring diagram. Reconnect the connector pins correctly.

NOTE

1832	Encoder communication data abnormal error

DESCRIPTION
- Data from the encoder caused communication error.

CAUSE
- Data may be abnormal due to noise.

SOLUTION
- Secure the power supply voltage 5V DC±5% of the encoder. Use care especially when the encoder cable is long. Separate the motor cable from the encoder cable if connected together. Connect the shield to the FG.

NOTE

1833	Position deviation overlimit error

DESCRIPTION
- Positional deviation pulse has exceeded the set value.

CAUSE
- The motor failed to follow the movement of command.
- The value of excessive positional deviation is small.

SOLUTION
- Check if the motor rotates according to the position command. Check the torque monitor and make sure the output torque is not saturated.
- Increase the set value.

NOTE

1834	Hybrid deviation overlimit error

DESCRIPTION
- Hybrid deviation pulse has exceeded the set value.

CAUSE
- During full-closed control mode, the load position by external scale and the motor position by encoder deviated by more than the preset pulses.

SOLUTION
- Check the connection between motor and load. Check the connection between external scale and servo amplifier.

NOTE

1835	Over speed error

DESCRIPTION
- Motor rotating speed has exceeded the set value.

CAUSE
- Motor rotating speed exceeded the set value of acceleration level setting.

SOLUTION
- Check for any excessive speed command issued. If overshoot occurred due to improper adjustment of gain, adjust the gain.

NOTE

1836	Command abnormal error

DESCRIPTION
- Operation command caused an error.

CAUSE
- Operation command value may not be set properly.

SOLUTION
- Check that improper command has not been entered.

NOTE

1837	External scale communication data abnormal error

DESCRIPTION
- Data from the external scale caused communication error.

CAUSE
- Data may be abnormal due to noise.

SOLUTION
- Secure the power supply voltage 5V DC±5% of the external scale. Use care especially when the external scale cable is long. Separate the motor cable from the external scale cable if connected together. Connect the shield to the FG.

NOTE

1838	Deviation counter overflow error

DESCRIPTION
- Deviation counter value has exceeded the set value.

CAUSE
- Deviation counter exceeded 2^{27} (134217728) pulse.

SOLUTION
- Check if the motor rotates according to the position command pulse. Check the torque monitor and make sure the output torque is not saturated.

NOTE

1839	Software limit error

DESCRIPTION
- Position command input range has exceeded the motor movable range.

CAUSE
- The gain is not matched.
- The value of software limit setting is small.

SOLUTION
- Check the gain and inertia ratio.
- Increase the software limit set value.

NOTE

1840	External scale communication abnormal error

DESCRIPTION
- External scale communication error was detected.

CAUSE
- Communication between the external scale and servo amplifier was interrupted more than a given count, which activated the disconnection detection.

SOLUTION
- Perform wiring of the external scale as indicated.

NOTE

1841	EEPROM Parameter abnormal error

DESCRIPTION
- EEPROM parameter error for the servo amplifier was detected.

CAUSE
- When reading the data from the EEPROM at power ON, the parameter save area data was found to be destroyed.

SOLUTION
- Set all parameters again. If the error persists, the EEPROM may be defective.

NOTE

1842	EEPROM Check code abnormal error

DESCRIPTION
- EEPROM check code error for the servo amplifier was detected.

CAUSE
- When reading the data from the EEPROM at power ON, the EEPROM write check data was found to be destroyed.

SOLUTION
- The EEPROM may be defective.

NOTE

1843	Drive prohibition input abnormal error

DESCRIPTION
- Abnormal drive prohibition input signal of the servo amplifier was entered.

CAUSE
- Both of the drive prohibition inputs (CW, CCW) opened.

SOLUTION
- Check for abnormality in the switch, wires and power supply connected to the prohibition inputs (CW, CCW). Especially check for slow rise time of the control signal power.

NOTE

1844	Absolute encoder system breakdown error

DESCRIPTION
- Absolute encoder system breakdown error was detected.

CAUSE
- Built-in capacitor voltage dropped to below the rated value because the supply power to the absolute encoder and battery power ran down.

SOLUTION
- Connect the battery power and clear the absolute encoder.

NOTE

1845	Absolute counter overflow error

DESCRIPTION
- Absolute counter overflow error was detected.

CAUSE
- The multiple rotation counter of the absolute encoder exceeded the rated value.

SOLUTION
- Set the absolute encoder setting to a proper value. Set the displacement from the machine origin to within 32767 rotations.

NOTE

1846	Absolute over speed abnormal error

DESCRIPTION
- Absolute over speed abnormal error was detected.

CAUSE
- The rotating speed of the motor exceeded the rated value while battery power only was being supplied at power failure.

SOLUTION
- Check the power voltage on the encoder side.

NOTE

1847	Absolute 1 round counter abnormal error

DESCRIPTION
- Absolute single rotation counter error was detected.

CAUSE
- Absolute encoder detected a single rotation counter error.

SOLUTION
- Replace the servomotor.

NOTE

1848	Absolute multi round counter abnormal error

DESCRIPTION
- Absolute multiple rotation counter error was detected.

CAUSE
- Absolute encoder detected a multiple rotation counter error.

SOLUTION
- Replace the servomotor.

NOTE

1849	Absolute status abnormal error

DESCRIPTION
- Absolute status error was detected.

CAUSE
- Absolute encoder rotated at the rated value or more at power ON.

SOLUTION
- Do not let the motor move when turning power ON.

NOTE

1850	Encoder Z phase abnormal error

DESCRIPTION
- Missing pulses of serial encoder Z-phase were detected.

CAUSE
- Encoder is at fault.

SOLUTION
- Replace the servomotor.

NOTE

1851	Encoder CS signal abnormal error

DESCRIPTION
- CS signal logic error of serial encoder was detected.

CAUSE
- Encoder is at fault.

SOLUTION
- Replace the servomotor.

NOTE

1852	External scale status 0 error

DESCRIPTION
- External scale error was detected.

CAUSE
- The bit 0 of the error code of the external scale changed to 1.

SOLUTION
- Eliminate the cause of the error and execute the command to clear the external scale error. Then turn the control power OFF once and turn it back ON.

NOTE

1853	External scale status 1 error

DESCRIPTION
- External scale error was detected.

CAUSE
- The bit 1 of the error code of the external scale changed to 1.

SOLUTION
- Eliminate the cause of the error and execute the command to clear the external scale error. Then turn the control power OFF once and turn it back ON.

NOTE

1854	External scale status 2 error

DESCRIPTION
- External scale error was detected.

CAUSE
- The bit 2 of the error code of the external scale changed to 1.

SOLUTION
- Eliminate the cause of the error and execute the command to clear the external scale error. Then turn the control power OFF once and turn it back ON.

NOTE

1855	External scale status 3 error

DESCRIPTION
- External scale error was detected.

CAUSE
- The bit 3 of the error code of the external scale changed to 1.

SOLUTION
- Eliminate the cause of the error and execute the command to clear the external scale error. Then turn the control power OFF once and turn it back ON.

NOTE

1856	External scale status 4 error

DESCRIPTION
- External scale error was detected.

CAUSE
- The bit 4 of the error code of the external scale changed to 1.

SOLUTION
- Eliminate the cause of the error and execute the command to clear the external scale error. Then turn the control power OFF once and turn it back ON.

NOTE

1857	External scale status 5 error

DESCRIPTION
- External scale error was detected.

CAUSE
- The bit 5 of the error code of the external scale changed to 1.

SOLUTION
- Eliminate the cause of the error and execute the command to clear the external scale error. Then turn the control power OFF once and turn it back ON.

NOTE

1858	External scale in addition error

DESCRIPTION
- External scale error was detected.

CAUSE
- External scale position reset command was executed. Or an error occurred due to other factor.

SOLUTION
- Turn the control power OFF once and turn it back ON to reset.

NOTE

1859	Node address setting abnormal error

DESCRIPTION
- Node address setting error was detected in the servo amplifier

CAUSE
- Node address set via the rotary switch on the front panel of the servo amplifier is 32 or more.

SOLUTION
- Set the node address of the servo amplifier to within 31 and restart the servo amplifier.

NOTE

1860	Continual communication abnormal error

DESCRIPTION
- Continual communication error was detected in the servo amplifier.

CAUSE
- Trouble occurred in the network command several times in succession.

SOLUTION
- Check the connector for proper connection. Replace the communication cable. If excessive noise on the communication cable is the problem, reroute the wiring.

NOTE

1861	Communication timeout abnormal error

DESCRIPTION
- Communication timeout of the servo amplifier was detected.

CAUSE
- A certain period of time elapsed without receipt of a network command.

SOLUTION
- Check that the communication cable between the servo amplifier and NC board is looped properly.

NOTE

1862	Cyclic data reception failure

DESCRIPTION
- Servo amplifier failed to receive the cyclic data.

CAUSE
- Invalid network command

SOLUTION
- Check for any abnormality in the network command.

NOTE

1863	Emergency stop input

DESCRIPTION
- Servo amplifier detected emergency stop input.

CAUSE
- Emergency stop input (No. 2 pin of EMG-STP) is open.

SOLUTION
- Check for any abnormality in the switch, wires and power supply connected to the emergency stop input. Especially check for slow rise time of the control signal power.

NOTE

1864	Motor auto-recognition abnormal error

DESCRIPTION
- Mismatch was detected during auto recognition of motor.

CAUSE
- Motor and servo amplifier do not match.

SOLUTION
- Replace the motor with the one that matches the servo amplifier.

NOTE

1865	Overload warning

DESCRIPTION
- Overload warning was issued.

CAUSE
- Load has exceeded 85% of the alarm level.

SOLUTION
- Check the torque (current) waveform for oscillation or strong vertical fluctuation.
  (1) Increase the servo amplifier/motor capacity. Increase the acceleration/ deceleration time. Reduce the load.
  (2) Readjust the gain.
  (3) Connect the wiring of the motor according to the wiring diagrams. Replace the cable.
  (4) Correct the distortion of machine. Reduce load.
  (5) Measure the voltage at the electromagnetic brake terminal. Release the electromagnetic brake.
  (6) Perform wiring properly so that the motor cable and encoder cable may be connected one-one-one to the amplifier.

NOTE

1866	Regenerative overload warning

DESCRIPTION
- Regenerative overload warning was issued.

CAUSE
- Regenerative load has exceeded 85% of the alarm level.

SOLUTION
- Check the operation pattern (Speed monitor). Check the regenerative resistor load factor and warning message for regenerative overload. Increase the motor/servo amplifier capacity. Slack up acceleration/deceleration time. Provide an external regenerative resistor.
- Decrease the motor rotations.

NOTE

1867	Battery warning

DESCRIPTION
- Battery warning was issued.

CAUSE
- The absolute encoder battery voltage has dropped to approx. 3.2V or below.

SOLUTION
- Replace the battery for the absolute encoder with the control power ON.

NOTE

1868	Continuous communication abnormal warning

DESCRIPTION
- Continuous communication abnormal warning was issued.

CAUSE
- Number of continuous communication errors of the servo amplifier has exceeded the set value.

SOLUTION
- Check the connector for proper connection. If excessive noise on the communication cable is the problem, reroute the wiring.

NOTE

1869	Communication abnormal accumulation warning

DESCRIPTION
- Communication error accumulation warning was issued.

CAUSE
- The number of communication errors has exceeded the set value.

SOLUTION
- Check the connector for proper connection. Replace the communication cable. If excessive noise on the communication cable is the problem, reroute the wiring.

NOTE

1870	Update Counter warning

DESCRIPTION
- Update counter warning was issued.

CAUSE
- Command update cycle is 1 ms and the update counter value was not properly incremented continuously more than the set value.

SOLUTION
- Check if the update counter is correctly incremented. Check that the command update cycle has been set properly.

NOTE

1871	Fan lock warning

DESCRIPTION
- Locked fan warning was issued.

CAUSE
- Cooling fan built in the servo amplifier was stopped for more than 1 s.

SOLUTION
- If this warning persists, the fan may be faulty. In such a case, the temperature inside the servo amplifier rises, possibly shortening its useful life. Inform us of the problem.

NOTE

1872	External scale warning

DESCRIPTION
- External scale warning was issued.

CAUSE
- External scale temperature is 65°C or higher, or signal strength is insufficient.

SOLUTION
- Check the specifications of the external scale.

NOTE

1873	Ring communication is not connect

DESCRIPTION
- The Ring communication was not able to be established at power supply ON.

CAUSE
- There is no power to supply Ring IO board.
- Disconnection or pull out optical cable.

SOLUTION
- Please confirm the state of the power supply of the Ring IO load board.
- Please confirm the state of the optical cable.

NOTE

1874	Ring communication time out

DESCRIPTION
- Ring communication was time-out.

CAUSE
- By the optical cable omission on reception side etc. after establishing the communication. The NC/IO board was not able to receive the Ring communication packet.

SOLUTION
- Confirmation of optical cable

NOTE

1875	Ring communication time out

DESCRIPTION
- The Ring communication error was detected.

CAUSE
- There is a possibility of disconnection, omission of the optical cable.

SOLUTION
- Please confirm the state of the optical cable.

NOTE

1876	Communication optical alarm

DESCRIPTION
- Communication optical alarm was detected.

CAUSE
- There is a possibility of quantities of light shortage of the Ring communication.

SOLUTION
- Please confirm quantities of light of the optical cable.

NOTE

1877	Controller fan motor life span alarm

DESCRIPTION
- Fan motor of the controller case was life span warning.

CAUSE
- The rotational speed of fan motor became below a set value.

SOLUTION
- There is a possibility of the end of the life span of fan motor.

NOTE

1878	Controller fan motor breakdown alarm

DESCRIPTION
- Fan motor of the controller case was breakdown warning.

CAUSE
- The rotational speed of fan motor became a stopping condition.

SOLUTION
- There is a possibility that fan motor is out of order.

NOTE

1879	AC FAIL detection

DESCRIPTION
- AC FAIL was detected.

CAUSE
- There is a possibility that the AC FAIL signal is input. There is a possibility that the CN8 connector of the NC/IO board has come off.

SOLUTION
- Please confirm the AC FAIL signal line.

NOTE

1880	Battery low warning

DESCRIPTION
- The battery for the backup of the memory of the NC/IO board was low voltage.

CAUSE
- The voltage of the battery became 2.7V or less.

SOLUTION
- The battery is exchanged.

NOTE

1881	Battery shortage warning

DESCRIPTION
- The battery for the backup of the memory of the NC/IO board was shortage.

CAUSE
- The voltage of the battery became 1.8V or less.

SOLUTION
- The battery of the NC/IO board is exchanged at once.

NOTE

1882	Board temperature overheat error

DESCRIPTION
- The surface temperature of the NC/IO board exceeded a set value.

CAUSE
- The surface temperature of the board exceeded 100℃.

SOLUTION
- Please contact our service section.

NOTE

1883	Keyboard overcurrent alarm

DESCRIPTION
- CPU board detected the keyboard overcurrent.

CAUSE
- The overcurrent was in the keyboard terminal of CPU board.

SOLUTION
- Please contact our service section.

NOTE

1884	Mouse overcurrent alarm

DESCRIPTION
- CPU board detected the mouse overcurrent.

CAUSE
- The overcurrent was in the mouse terminal of CPU board.

SOLUTION
- Please contact our service section.

NOTE

1885	CPU internal error

DESCRIPTION
- An internal error of CPU board was detected.

CAUSE
- There is a possibility that CPU board is out of order.

SOLUTION
- Please contact our service section.

NOTE

1886	CPU battery alarm

DESCRIPTION
- The battery alarm of CPU board was detected.

CAUSE
- There is a possibility that CPU board is out of order.

SOLUTION
- Please contact our service section.

NOTE

1887	CPU thermal alarm

DESCRIPTION
- The thermal alarm of CPU board was detected.

CAUSE
- There is a possibility that CPU board is out of order.

SOLUTION
- Please contact our service section.

NOTE

1888	LVDS over current alarm

DESCRIPTION
- The LVDS overcurrent alarm of CPU board was detected.

CAUSE
- There is a possibility that CPU board is out of order.

SOLUTION
- Please contact our service section.

NOTE

1889	DVI overcurrent alarm

DESCRIPTION
- The DVI overcurrent alarm of CPU board was detected.

CAUSE
- There is a possibility that CPU board is out of order.

SOLUTION
- Please contact our service section.

NOTE

1890	USB0 overcurrent alarm

DESCRIPTION
- The USB0 overcurrent alarm of CPU board was detected.

CAUSE
- There is a possibility that CPU board is out of order.

SOLUTION
- Please contact our service section.

NOTE

1891	USB1 overcurrent alarm

DESCRIPTION
- The USB1 overcurrent alarm of CPU board was detected.

CAUSE
- There is a possibility that CPU board is out of order.

SOLUTION
- Please contact our service section.

NOTE

1892	USB2 overcurrent alarm

DESCRIPTION
- The USB2 overcurrent alarm of CPU board was detected.

CAUSE
- There is a possibility that CPU board is out of order.

SOLUTION
- Please contact our service section.

NOTE

1893	USB3 overcurrent alarm

DESCRIPTION
- The USB3 overcurrent alarm of CPU board was detected.

CAUSE
- There is a possibility that CPU board is out of order.

SOLUTION
- Please contact our service section.

NOTE

1894	USB4 overcurrent alarm

DESCRIPTION
- The USB4 overcurrent alarm of CPU board was detected.

CAUSE
- There is a possibility that CPU board is out of order.

SOLUTION
- Please contact our service section.

NOTE

1895	USB5 overcurrent alarm

DESCRIPTION
- The USB5 overcurrent alarm of CPU board was detected.

CAUSE
- There is a possibility that CPU board is out of order.

SOLUTION
- Please contact our service section.

NOTE

1896	CF access impossible

DESCRIPTION
- It was not able to access CF on CPU board.

CAUSE
- There is a possibility that CPU board is out of order.

SOLUTION
- Please contact our service section.

NOTE

1897	Power ON first Safety Stop

DESCRIPTION
- Machine is under safety stop condition.

CAUSE
- Whenever machine was turned on, it becomes safety stop condition.

SOLUTION
- Please continue the operation after press the [Return] to close error screen.

NOTE

1898	Front cover open

DESCRIPTION
- Front cover was opened.

CAUSE
- Front cover detected a safety switch signal.

SOLUTION
- Close the cover and press the [Return] .

NOTE

1899	Rear cover open

DESCRIPTION
- Rear cover was opened.

CAUSE
- Rear cover detected a safety switch signal.

SOLUTION
- Close the cover and press the [Return] .

NOTE

1900	Maintenance mode switching error

DESCRIPTION
- Production menu was selected during maintenance.

CAUSE
- Production menu is restricted during maintenance.

SOLUTION
- Release the maintenance mode.

NOTE

1901	Maintenance switch abnormal

DESCRIPTION
- Maintenance switch was detected abnormally.

CAUSE
- Maintenance switch was detected with the cover closed.
  (1) Cover switch has been sort-circuited intentionally.
  (2) Faulty maintenance switch

SOLUTION
- Do not short-circuit the cover switch intentionally.
- Check the detected state of the maintenance switch.

NOTE

2003	PCB carry in restart cancel (right rail belt)

DESCRIPTION
- The restart of the PCB carrying in was canceled.

CAUSE
- When the carrying in operation was restarted by the safety stop release, PCB was detected at the right rail exit.

SOLUTION
- Please restart the operation after confirming PCB on a right rail.

NOTE

2011	PCB carry in restart cancel (right rail exit)

DESCRIPTION
- The restart of the PCB carrying in was canceled.

CAUSE
- When the carrying in operation was restarted by the safety stop release, PCB was detected at the right rail exit.

SOLUTION
- Please restart the operation after confirming PCB on a right rail.

NOTE

2012	PCB carry in restart cancel (right rail exit)

DESCRIPTION
- The restart of the PCB carrying in was canceled.

CAUSE
- When the carrying in operation was restarted by the safety stop release, PCB was detected at the right rail exit.

SOLUTION
- Please restart the operation after confirming PCB on a right rail.

NOTE

2052	PCB carry out restart cancel (left rail belt)

DESCRIPTION
- The restart of the PCB carrying out was canceled.

CAUSE
- When the carrying out operation was restarted by the safety stop release, PCB was detected at the left rail exit.

SOLUTION
- Please restart the operation after confirming PCB on a left rail.

NOTE

2079	PCB carry out restart cancel (left rail exit)

DESCRIPTION
- The restart of the PCB carrying out was canceled.

CAUSE
- When the carrying out operation was restarted by the safety stop release, PCB was detected at the left rail exit.

SOLUTION
- Please restart the operation after confirming PCB on a left rail.

NOTE

2209	Rail down condition not satisfies (left rail return limit)

DESCRIPTION
- Rail down action was not done, because of the lack of the rail down condition.

CAUSE
- Left rail return limit has been turned off.

SOLUTION
- It is necessary to have turned on the left rail return limit to down rail.

NOTE

2216	Rail down condition not satisfies (positioner lever return limit)

DESCRIPTION
- Rail down action was not done, because of the lack of the rail down condition.

CAUSE
- Positioner lever return limit has been turned off.

SOLUTION
- It is necessary to have turned on the positioner lever return limit to down rail.

NOTE

2221	Rail down condition not satisfies (right rail return limit)

DESCRIPTION
- Rail down action was not done, because of the lack of the rail down condition.

CAUSE
- Right rail return limit has been turned off.

SOLUTION
- It is necessary to have turned on the right rail return limit to down rail.

NOTE

2223	Rail down condition not satisfies (servo switch)

DESCRIPTION
- Rail down action was not done, because of the lack of the rail down condition.

CAUSE
- Servo switch has been turned off.

SOLUTION
- It is necessary to have turned on the servo switch to down rail.

NOTE

2225	Rail down condition not satisfies (transfer arm return limit)

DESCRIPTION
- Rail down action was not done, because of the lack of the rail down condition.

CAUSE
- Transfer arm return limit has been turned off.

SOLUTION
- It is necessary to have turned on the transfer arm return limit to down rail.

NOTE

2231	Rail down condition not satisfies (XY origin)

DESCRIPTION
- Rail down action was not done, because of the lack of the rail down condition.

CAUSE
- X or Y axis origin sensor has been turned off.

SOLUTION
- It is necessary to have turned on the X and Y axis origin sensor to down rail.

NOTE

2232	Rail down condition not satisfies (XY movement)

DESCRIPTION
- Rail down action was not done, because of the lack of the rail down condition.

CAUSE
- X or Y axis is moving

SOLUTION
- It is necessary to have stopped X and Y axis to down rail.

NOTE

2258	Arm carry condition not satisfies (left rail traverse limit)

DESCRIPTION
- Transfer arm movement was not done, because of the lack of the transfer arm movement condition.

CAUSE
- Left rail traverse limit has been turned off.

SOLUTION
- It is necessary to have turned on the left rail traverse limit to move transfer arm.

NOTE

2270	Arm carry condition not satisfies (right rail traverse limit)

DESCRIPTION
- Transfer arm movement was not done, because of the lack of the transfer arm movement condition.

CAUSE
- Right rail traverse limit has been turned off.

SOLUTION
- It is necessary to have turned on the right rail traverse limit to move transfer arm.

NOTE

2273	Arm carry condition not satisfies (servo switch)

DESCRIPTION
- Transfer arm movement was not done, because of the lack of the transfer arm movement condition.

CAUSE
- Servo switch has been turned off.

SOLUTION
- It is necessary to have turned on the servo switch to move transfer arm.

NOTE

2275	Arm carry condition not satisfies (transfer arm return limit)

DESCRIPTION
- Transfer arm movement was not done because of the lack of the transfer arm movement condition.

CAUSE
- Transfer arm return limit has been turned off.

SOLUTION
- It is necessary to have turned on the transfer arm return limit to move transfer arm.

NOTE

2281	Arm carry condition not satisfies (XY origin)

DESCRIPTION
- Transfer arm movement was not done because of the lack of the transfer arm movement condition.

CAUSE
- X or Y axis origin sensor has been turned off.

SOLUTION
- It is necessary to have turned on the X and Y axis origin sensor to move transfer arm.

NOTE

2282	Arm carry condition not satisfies (XY movement)

DESCRIPTION
- Transfer arm movement was not done because of the lack of the transfer arm movement condition.

CAUSE
- X or Y axis is moving.

SOLUTION
- It is necessary to have stopped X and Y axis to move transfer arm.

NOTE

2308	Arm slowdown condition not satisfies (left rail traverse limit)

DESCRIPTION
- Arm slowdown was not done because of the lack of the slowdown condition.

CAUSE
- Left rail traverse limit has been turned off.

SOLUTION
- It is necessary to have turned on the left rail traverse limit to slowdown.

NOTE

2320	Arm slowdown condition not satisfies (right rail traverse limit)

DESCRIPTION
- Arm slowdown was not done because of the lack of the slowdown condition.

CAUSE
- Right rail traverse limit has been turned off.

SOLUTION
- It is necessary to have turned on the right rail traverse limit to slowdown.

NOTE

2323	Arm slowdown condition not satisfies (servo switch)

DESCRIPTION
- Arm slowdown was not done, because of the lack of the slowdown condition.

CAUSE
- Servo switch has been turned off.

SOLUTION
- It is necessary to have turned on the servo switch to slowdown.

NOTE

2331	Arm slowdown condition not satisfies (XY origin)

DESCRIPTION
- Arm slowdown was not done because of the lack of the slowdown condition.

CAUSE
- X or Y axis origin sensor has been turned off.

SOLUTION
- It is necessary to have turned on the X and Y axis origin sensor to slowdown.

NOTE

2332	Arm slowdown condition not satisfies (XY movement)

DESCRIPTION
- Arm slowdown was not done because of the lack of the slowdown condition.

CAUSE
- X or Y axis is moving.

SOLUTION
- It is necessary to have stopped X and Y axis to slowdown.

NOTE

2358	Rail up condition not satisfies (left rail traverse limit)

DESCRIPTION
- Rail up action was not done because of the lack of the rail up condition.

CAUSE
- Left rail return limit has been turned off.

SOLUTION
- It is necessary to have turned on the left rail return limit to up rail.

NOTE

2365	Rail up condition not satisfies (positioner lever traverse limit)

DESCRIPTION
- Rail up action was not done because of the lack of the rail up condition.

CAUSE
- Positioner lever traverse limit has been turned off.

SOLUTION
- It is necessary to have turned on the positioner lever traverse limit to up rail.

NOTE

2370	Rail up condition not satisfies (right rail traverse limit)

DESCRIPTION
- Rail up action was not done because of the lack of the rail up condition

CAUSE
- Right rail return limit has been turned off.

SOLUTION
- It is necessary to have turned on the right rail return limit to up rail.

NOTE

2373	Rail up condition not satisfies (servo switch)

DESCRIPTION
- Rail up action was not done because of the lack of the rail up condition.

CAUSE
- Servo switch has been turned off.

SOLUTION
- It is necessary to have turned on the servo switch to up rail.

NOTE

2374	Rail up condition not satisfies (transfer arm traverse limit)

DESCRIPTION
- Rail up action was not done because of the lack of the rail up condition.

CAUSE
- Transfer arm traverse limit has been turned off.

SOLUTION
- It is necessary to have turned on the transfer arm traverse limit to up rail.

NOTE

2381	Rail up condition not satisfies (XY origin)

DESCRIPTION
- Rail up action was not done because of the lack of the rail up condition.

CAUSE
- X or Y axis origin sensor has been turned off.

SOLUTION
- It is necessary to have turned on the X and Y axis origin sensor to up rail.

NOTE

2382	Rail up condition not satisfies (XY movement)

DESCRIPTION
- Rail up action was not done because of the lack of the rail up condition.

CAUSE
- X or Y axis is moving.

SOLUTION
- It is necessary to have stopped X and Y axis to up rail.

NOTE

2409	Arm return condition not satisfies (left rail return limit)

DESCRIPTION
- Arm return action was not done because of the lack of the return condition.

CAUSE
- Left rail return limit has been turned off.

SOLUTION
- It is necessary to have turned on the left rail return limit to return arm.

NOTE

2416	Arm return condition not satisfies (positioner return limit)

DESCRIPTION
- Arm return action was not done because of the lack of the return condition.

CAUSE
- Positioner lever return limit has been turned off.

SOLUTION
- It is necessary to have turned on the positioner lever return limit to return arm.

NOTE

2421	Arm return condition not satisfies (right rail return limit)

DESCRIPTION
- Arm return action was not done because of the lack of the return condition.

CAUSE
- Right rail return limit has been turned off.

SOLUTION
- It is necessary to have turned on the right rail return limit to return arm.

NOTE

2424	Arm return condition not satisfies (transfer arm traverse limit)

DESCRIPTION
- Arm return action was not done because of the lack of the return condition.

CAUSE
- Transfer arm traverse limit has been turned off.

SOLUTION
- It is necessary to have turned on the transfer arm traverse limit to return arm.

NOTE

2451	Right rail belt motor timeout

DESCRIPTION
- Belt motor was stopped due to timeout of the right rail belt motor.

CAUSE
- PCB failed to reach the right rail outlet sensor within the prescribed time after the right rail started rotating.
  (1) Misdetection by the outlet sensor
  (2) Dropped PCB during transport
  (3) PCB jam during transport
  (4) PCB was removed during transport.
  (5) Belt motor started rotating due to false detection by the inlet sensor.

SOLUTION
- Check the outlet sensor.
- Adjust the rail width.
- Load a PCB again.
- Check the inlet sensor.

NOTE

2452	Left rail belt motor timeout

DESCRIPTION
- Belt motor was stopped due to timeout of the left rail belt motor.

CAUSE
- PCB failed to reach the left rail outlet sensor within the prescribed time after the left rail started rotating.
  (1) Misdetection by the outlet sensor
  (2) Dropped PCB during transport
  (3) PCB jam during transport
  (4) PCB was removed during transport.
  (5) Belt motor started rotating due to false detection by the inlet sensor.

SOLUTION
- Check the outlet sensor.
- Adjust the rail width.
- Load a PCB again.
- Check the inlet sensor.

NOTE

2453	Right rail down movement timeout

DESCRIPTION
- Timeout was detected during lowering process of the right rail.

CAUSE
- Right rail lower limit sensor failed to turn ON within the prescribed time after the right rail started lowering.
  (1) Misdetection by the lower limit sensor
  (2) Malfunction of the cylinder

SOLUTION
- Check the lower limit sensor.
- Check the cylinder for proper operation.

NOTE

2454	Right rail up movement timeout

DESCRIPTION
- Timeout was detected during rising process of the right rail.

CAUSE
- Right rail upper limit sensor failed to turn ON within the prescribed time after the right rail started rising.
  (1) Misdetection by the upper limit sensor
  (2) Malfunction of the cylinder

SOLUTION
- Check the upper limit sensor.
- Check the cylinder for proper operation.

NOTE

2455	Left rail down movement timeout

DESCRIPTION
- Timeout was detected during lowering process of the left rail.

CAUSE
- Left rail lower limit sensor failed to turn ON within the prescribed time after the left rail started lowering.
  (1) Misdetection by the lower limit sensor
  (2) Malfunction of the cylinder

SOLUTION
- Check the lower limit sensor.
- Check the cylinder for proper operation.

NOTE

2456	Left rail up movement timeout

DESCRIPTION
- Timeout was detected during rising process of the left rail.

CAUSE
- Left rail upper limit sensor failed to turn ON within the prescribed time after the left rail started rising.
  (1) Misdetection by the upper limit sensor
  (2) Malfunction of the cylinder

SOLUTION
- Check the upper limit sensor.
- Check the cylinder for proper operation.

NOTE

2457	Transfer arm forward movement timeout

DESCRIPTION
- Timeout was detected during forward process of the transfer arm.

CAUSE
- Transfer arm forward limit sensor failed to turn ON within the prescribed time after the transfer arm started moving.
  (1) Misdetection by the forward limit sensor.
  (2) Malfunction of the transfer arm
  (3) Faulty inverter unit

SOLUTION
- Check the forward limit sensor.
- Check the transfer arm for proper operation.
- Check the inverter unit.

NOTE

2458	Transfer arm return movement timeout

DESCRIPTION
- Timeout was detected during return process of the transfer arm.

CAUSE
- Transfer arm return limit sensor failed to turn ON within the prescribed time after the transfer arm started moving.
  (1) Misdetection by the return limit sensor
  (2) Malfunction of the transfer arm
  (3) Faulty inverter unit

SOLUTION
- Check the return limit sensor.
- Check the transfer arm for proper operation.
- Check the inverter unit.

NOTE

2461	Positioner lever forward movement timeout

DESCRIPTION
- Timeout was detected during forward process of the positioner lever.

CAUSE
- Positioner lever forward limit sensor failed to turn ON within the prescribed time after the positioner lever started moving.
  (1) Misdetection by the forward limit sensor
  (2) Malfunction of the positioner lever

SOLUTION
- Check the forward limit sensor.
- Check the positioner lever for proper operation.

NOTE

2462	Positioner lever return movement timeout

DESCRIPTION
- Timeout was detected during return process of the positioner lever.

CAUSE
- Positioner lever return limit sensor failed to turn ON within the prescribed time after the positioner lever started moving.
  (1) Misdetection by the return limit sensor
  (2) Malfunction of the positioner lever

SOLUTION
- Check the return limit sensor.
- Check the positioner lever for proper operation.

NOTE

2463	Left rail push forward movement timeout

DESCRIPTION
- Timeout was detected during forward process of the left rail pusher.

CAUSE
- Left rail pusher forward limit sensor failed to turn ON within the prescribed time after the left rail pusher started moving forward.
  (1) Misdetection by the forward limit sensor
  (2) Malfunction of the left rail pusher

SOLUTION
- Check the forward limit sensor.
- Check the left rail pusher for proper operation.

NOTE

2464	Left rail push return movement timeout

DESCRIPTION
- Timeout was detected during return process of the left rail pusher.

CAUSE
- Left rail pusher return limit sensor failed to turn ON within the prescribed time after the left rail pusher started moving backward.
  (1) Misdetection by the return limit sensor
  (2) Malfunction of the left rail pusher

SOLUTION
- Check the return limit sensor.
- Check the left rail pusher for proper operation.

NOTE

2551	PCB abnormal detection (right rail)

DESCRIPTION
- Something is wrong with the PCB on the right rail.

CAUSE
- There may be two or more PCBs on the right rail.

SOLUTION
- Check the PCB on the right rail for proper condition.

NOTE

2552	PCB abnormal detection (left rail)

DESCRIPTION
- Something is wrong with the PCB on the left rail.

CAUSE
- There may be two or more PCBs on the left rail.

SOLUTION
- Check the PCB on the left rail for proper condition.

NOTE

2641	Encoder error

DESCRIPTION
- Trouble occurred in the rotary encoder connected to the camshaft.

CAUSE
- Encoder error of the cycle timer was detected.

SOLUTION
- Check the encoder of the cycle timer or cycle timer input board. If hunting occurs, check the gain of the head axis, cycle timer data or the belt connected to the encoder for proper condition.

NOTE

2643	Servo free error

DESCRIPTION
- Servo free error was detected.

CAUSE
- Servomotor failed to switch to the servomotor from lock position to release position.

SOLUTION
- When the head brake switch is in the release position, switch to the lock side. Check the NC for proper condition.

NOTE

2645	Brake switch release error

DESCRIPTION
- Brake switch is in the release position.

CAUSE
- Brake switch was switched to the release position with the servomotor of the head axis locked.

SOLUTION
- Switch the brake switch in the lock position with the servomotor of the head axis locked.

NOTE

2646	H axis Servo ON error

DESCRIPTION
- H axis servo is not ready condition.

CAUSE
- H axis motor driver detect low voltage.

SOLUTION
- Please check H axis condition. If servo alarm occurs, turn machine off and on.

NOTE

2647	Handle detection error

DESCRIPTION
- Pushing H axis rotation wheel was detected.

CAUSE
- H axis wheel detection (800C3:bit2) was detected while H axis was running.

SOLUTION
- Please return H axis rotation wheel to original position.

NOTE

2648	No PCB on XY table

DESCRIPTION
- XY table failed to detect PCB.

CAUSE
- Reference pin has not been positioned to the reference hole of the PCB correctly.
- Faulty PCB detection sensor
- Bent PCB detection lever

SOLUTION
- Check if the PCB is positioned properly to the XY table.
- Check that the PCB detection sensor functions properly.
- Check the PCB detection lever for any bent.

NOTE

2649	Carry miss

DESCRIPTION
- PCB loading or unloading failure was detected.

CAUSE
- Pin of the PCB transfer arm may not have been positioned properly.
- Rail width may be not wide enough to feed PCB smoothly.
- Orientation of PCB may be incorrect.

SOLUTION
- Check the transfer arm for proper condition.
- Check for correct PCB rail width.
- Check the PCB for proper condition.

NOTE

2652	Rear left safety detection

DESCRIPTION
- The machine became a safety stop condition by the safety detection in the left feeder cover.

CAUSE
- The cover of the left feeder has been opened.

SOLUTION
- Press [Return] after closing the cover. Then please release the safety stop condition to push <Start> with <ENABLING>.

NOTE

2653	Rear right safety detection

DESCRIPTION
- The machine became a safety stop condition by the safety detection in the right feeder cover.

CAUSE
- The cover of the right feeder has been opened.

SOLUTION
- Press [Return] after closing the cover. Then please release the safety stop condition to push <Start> with <ENABLING>.

NOTE

2654	Rear left center safety detection

DESCRIPTION
- The machine became a safety stop condition by the safety detection in the left center feeder cover.

CAUSE
- The cover of the left center feeder has been opened.

SOLUTION
- Press [Return] after closing the cover. Then please release the safety stop condition to push <Start> with <ENABLING>.

NOTE

2655	Rear right center safety detection

DESCRIPTION
- The machine became a safety stop condition by the safety detection in the right center feeder cover.

CAUSE
- The cover of the right center feeder has been opened.

SOLUTION
- Press [Return] after closing the cover. Then please release the safety stop condition to push <Start> with <ENABLING>.

NOTE

2656	Front cover safety detection

DESCRIPTION
- The machine became a safety stop condition by the safety detection in the front cover.

CAUSE
- The cover of the front has been opened.

SOLUTION
- Press [Return] after closing the cover. Then please release the safety stop condition to push <Start> with <ENABLING>.

NOTE

2657	Right rail cover safety detection

DESCRIPTION
- The machine became a safety stop condition by the safety detection in the right rail cover.

CAUSE
- The cover of the right rail has been opened.

SOLUTION
- Press [Return] after closing the cover. Then please release the safety stop condition to push <Start> with <ENABLING>.

NOTE

2658	Left rail cover safety detection

DESCRIPTION
- The machine became a safety stop condition by the safety detection in the left rail cover.

CAUSE
- The cover of the left rail has been opened.

SOLUTION
- Press [Return] after closing the cover. Then please release the safety stop condition to push <Start> with <ENABLING>.

NOTE

2659	Rear upper cover safety detection

DESCRIPTION
- The machine became a safety stop condition by the safety detection in the rear upper cover.

CAUSE
- The cover of the rear upper has been opened.

SOLUTION
- Press [Return] after closing the cover. Then please release the safety stop condition to push <Start> with <ENABLING>.

NOTE

2663	Cancel replacement completion input (open rear left cover)

DESCRIPTION
- Part replacement completion input was canceled.

CAUSE
- Rear left cover was opened.

SOLUTION
- Please close the rear left cover then input part replacement completion switch again.

NOTE

2664	Cancel replacement completion input (open rear right cover)

DESCRIPTION
- Part replacement completion input was canceled.

CAUSE
- Rear right cover was opened.

SOLUTION
- Please close the rear right cover then input part replacement completion switch again.

NOTE

2665	Cancel replacement completion input (float left feeder)

DESCRIPTION
- Part replacement completion input was canceled.

CAUSE
- Feeder in the left part supply floats.

SOLUTION
- Please confirm feeder condition then input part replacement completion switch again.

NOTE

2666	Cancel replacement completion input (float right feeder)

DESCRIPTION
- Part replacement completion input was canceled.

CAUSE
- Feeder in the right part supply floats.

SOLUTION
- Please confirm feeder condition then input part replacement completion switch again.

NOTE

2668	Cancel replacement completion input (never open rear left cover)

DESCRIPTION
- Part replacement completion input was canceled.

CAUSE
- Part replacement completion operation was done without opening the rear left cover.

SOLUTION
- Please close the cover after opening the cover once then input part replacement completion switch again.

NOTE

2669	Cancel replacement completion input (never open rear right cover)

DESCRIPTION
- Part replacement completion input was canceled.

CAUSE
- Part replacement completion operation was done without opening the rear right cover.

SOLUTION
- Please close the cover after opening the cover once then input part replacement completion switch again.

NOTE

2670	Insertion error (Neither lead detection)

DESCRIPTION
- Insertion error was detected. Neither of two leads of the part was detected to have been inserted.

CAUSE
- Refer to “DETAILED DESCRIPTION”.

SOLUTION
- Take appropriate action according to “DETAILED DESCRIPTION”.
- Close the error screen and remove the part concerned.
- Refer to the pop-up guidance displayed on the screen for how to continue/resume production.

DETAILED DESCRIPTION

Probable causes and actions to be taken are as follows:
- Improper handover position from the rotary chuck to the slide chuck. Adjust the stroke and position of the slide chuck.
- Nonsmooth piston movements of the slide chuck Apply oil to the piston.
- Damaged or bent rotary chuck Replace the rotary chuck.
- Gap in the closed rotary chuck Replace the rotary chuck if the gap is 0.1 mm or more.
- Part lead bent more than the specification Use a part that conforms to the specifications.
- Nonsmooth part feed in the feeder due to taping width narrower than the specification. Use a part that conforms to the specifications.
- Nonsmooth part feed in the feeder due to taping width wider than the specification. Use a part that conforms to the specifications.
- Loose parts taping Use a part that conforms to the taping strength of the specifications.
- Incomplete cartridge/feeder setting Check that the feeder and cartridge have been properly set in position.
- Improper part pulling position of the rotary chuck Adjust the transfer chuck unit and feed unit.
- Nonsmooth rotary chuck opening/closing Apply oil to the swing unit and sliding unit.
- Air leaking due to damaged or cracked air hose Replace the hose.
- Bent slide chuck block Replace the block.
- Worn tape cutter blade Replace the blade.
- Improperly adjusted tape cutter blade position Adjust the extension of the blade.
- The machine is stopped due to insertion error even when parts have been exhausted. (Part detection sensor is always ON.) Clean and adjust the part detection sensor.

NOTE

2671	Insertion error (No right lead detection)

DESCRIPTION
- Insertion error was detected. Right lead of the part was not detected to have been inserted.

CAUSE
- Refer to “DETAILED DESCRIPTION”.

SOLUTION
- Take appropriate action according to “DETAILED DESCRIPTION”.
- Close the error screen and remove the part concerned.
- Refer to the pop-up guidance displayed on the screen for how to continue/resume production.

DETAILED DESCRIPTION

Probable causes and actions to be taken are as follows:
- Worn pusher and bending die Replace if worn.
- Gap between the pusher and bending die is larger than the reference value. Readjust the gap.
- Gap between the bending die and insertion guide is larger than the reference value. Readjust the gap.
- PCB hole and insertion unit not aligned even after recognition. Check the rotation offset and camera offset.
- Mismatch of size between the reference pin and PCB Use a reference pin with proper size.
- Rail width wider than the reference value. Set the width of PCB to +0.05 mm.
- Worn insertion unit and cutter or improper adjustment of gap between them Replace the unit or adjust the gap.
- Width of the insertion guide at origin is outside the reference value. Return the WH axis to its origin.
- Hole diameter is smaller than the lead diameter. Correct the relationship between the lead and hole diameters.
- Inappropriate line diameter and pitch data Enter the correct values.
- Off-centered insertion guide Perform centering of the insertion unit.
- The machine is stopped due to insertion error even when parts have been exhausted. (Part detection sensor is always ON.) Clean and adjust the part detection sensor.

NOTE

2672	Insertion error (No left lead detection)

DESCRIPTION
- Insertion error was detected. Left lead of the part was not detected to have been inserted.

CAUSE
- Refer to “DETAILED DESCRIPTION”.

SOLUTION
- Take appropriate action according to “DETAILED DESCRIPTION”.
- Close the error screen and remove the part concerned.
- Refer to the pop-up guidance displayed on the screen for how to continue/resume production.

DETAILED DESCRIPTION

Probable causes and actions to be taken are as follows:
- Worn pusher and bending die Replace if worn.
- Gap between the pusher and bending die is larger than the reference value. Readjust the gap.
- Gap between the bending die and insertion guide is larger than the reference value. Readjust the gap.
- PCB hole and insertion unit not aligned even after recognition. Check the rotation offset and camera offset.
- Mismatch of size between the reference pin and PCB Use a reference pin with proper size.
- Rail width wider than the reference value. Set the width of PCB to +0.05 mm.
- Worn insertion unit and cutter or improper adjustment of gap between them Replace the unit or adjust the gap.
- With of the insertion guide at origin is outside the reference value. Return the WH axis to its origin.
- Hole diameter is smaller than the lead diameter. Correct the relationship between the lead and hole diameters.
- Inappropriate line diameter and pitch data Enter the correct values.
- Off-centered insertion guide Perform centering of the insertion unit.
- The machine is stopped due to insertion error even when parts have been exhausted. (Part detection sensor is always ON.) Clean and adjust the part detection sensor.

NOTE

2673	Anvil short error (left & right lead detection)

DESCRIPTION
- Insertion of both leads was detected during trial where no part is supposed to be inserted.

CAUSE
- Improper adjustment of clincher blade position
- Dirt adhered to the inside of the clincher.
- Clogged suction hose of the anvil
- Contact failure in the wiring to the insertion detection box
- Anvil is within the dead space at the insertion position.
- Another part inserted to a position where a part has already been inserted.

SOLUTION
- Readjust the clincher.
- Remove the clincher and clinch base, then clean inside.
- Clear the clogged hose. Dispose of any accumulated wastes inside the waste bottle.
- Check for wire break and contact of the connectors.
- Check the dead space.
- Check the insertion position.

NOTE

2674	Anvil short error (left lead detection)

DESCRIPTION
- Insertion of left lead was detected during trial where no part is supposed to be inserted.

CAUSE
- Improper adjustment of clincher blade position
- Dirt adhered to the inside of the clincher.
- Clogged suction hose of the anvil
- Contact failure in the wiring to the insertion detection box
- Anvil is within the dead space at the insertion position.
- Another part inserted to a position where a part has already been inserted.

SOLUTION
- Readjust the clincher.
- Remove the clincher and clinch base, then clean inside.
- Clear the clogged hose. Dispose of any accumulated wastes inside the waste bottle.
- Check for wire break and contact of the connectors.
- Check the dead space.
- Check the insertion position.

NOTE

2675	Anvil short error (right lead detection)

DESCRIPTION
- Insertion of right lead was detected during trial where no part is supposed to be inserted.

CAUSE
- Improper adjustment of clincher blade position
- Dirt adhered to the inside of the clincher.
- Clogged suction hose of the anvil
- Contact failure in the wiring to the insertion detection box
- Anvil is within the dead space at the insertion position.
- Another part inserted to a position where a part has already been inserted.

SOLUTION
- Readjust the clincher.
- Remove the clincher and clinch base, then clean inside.
- Clean the clogged hose. Dispose of any accumulated wastes inside the waste bottle.
- Check for wire break and contact of the connectors.
- Check the dead space.
- Check the insertion position.

NOTE

2682	26 / 52 change error

DESCRIPTION
- The result of 26 mm chuck shunting detection sensor in slide chuck was not corresponding to chuck information on the insertion parts.

CAUSE
- 26/52 pitch switch action may not be completed up to the cycle timer 280 degrees.
- There is a possibility of the breakdown of 26 mm shunting detection sensor.

SOLUTION
- Please confirm whether 26 / 52 pitch switch operates correctly.
- Please confirm whether 26 mm shunting sensor detect correctly.

NOTE

2696	No PCB on XY table

DESCRIPTION
- XY table failed to detect PCB.

CAUSE
- Reference pin has not been positioned to the reference hole of the PCB correctly.
- Faulty PCB detection sensor
- Bent PCB detection lever

SOLUTION
- Check if the PCB is positioned properly to the XY table.
- Check that the PCB detection sensor functions properly.
- Check the PCB detection lever for any bent.

NOTE

2697	Feeder type error (26 / 52)

DESCRIPTION
- Feeder (loaded on the part supply unit) type error was detected.

CAUSE
- Feeder type specified in the parts data and actual feeder do not agree.
  (1) The type of the feeder loaded on the part supply unit is wrong.
  (2) The type of the feeder in the parts data has not been specified correctly.

SOLUTION
- Check the feeder type loaded on the part supply unit.
- Check the feeder type specified in the parts data.

NOTE

2707	H axis origin off

DESCRIPTION
- H axis has not stopped in the machine origin.

CAUSE
- H axis has come off from the machine origin.

SOLUTION
- Please make H axis servo free and return H axis to the machine origin by the handle operation.

NOTE

2708	Feeder float detection error

DESCRIPTION
- Feeder float of part supply unit was detected.

CAUSE
- Before moving part supply axis feeder float detection sensor was detected.

SOLUTION
- Please confirm the setting of feeder on part supply unit.

NOTE

2710	Safety relay reset condition

DESCRIPTION
- Safety relay is still open when operate safety stop clear. So safety stop condition is still continued.

CAUSE
- Safety relay may be abnormal. There is a possibility that some cover still opened.

SOLUTION
- Please confirm safety relay by the input check of the machine adjustment.
- Please confirm whether all the covers are closed.

NOTE

2731	PCB carry in restart cancel

DESCRIPTION
- Restart of PCB carry-in was canceled.

CAUSE
- Conditions required for restarting PCB carry-in may have not been satisfied.

SOLUTION
- Check the conditions for restarting PCB carry-in.

NOTE

2732	PCB carry out restart cancel

DESCRIPTION
- Restart of PCB carry-out was canceled.

CAUSE
- Conditions required for restarting PCB carry-out may have not been satisfied.

SOLUTION
- Check the conditions for restarting PCB carry-out.

NOTE

2733	PCB sweep out restart cancel

DESCRIPTION
- Restart of PCB sweep-out was canceled.

CAUSE
- Conditions required for restarting PCB sweep-out may have not been satisfied.

SOLUTION
- Check the conditions for restarting PCB sweep-out.

NOTE

2734	PCB carry start conditional not satisfies

DESCRIPTION
- Failed to start PCB carry.

CAUSE
- Lack of conditions required for starting PCB carry

SOLUTION
- Check the conditions for starting PCB carry.

NOTE

2735	Rail down condition not satisfies

DESCRIPTION
- The rail failed to be moved down.

CAUSE
- Lack of conditions required for moving down the rail.

SOLUTION
- Check the conditions for moving down the rail.

NOTE

2736	Arm carry condition not satisfies

DESCRIPTION
- The transfer arm failed to move.

CAUSE
- Lack of conditions required for moving the transfer arm.

SOLUTION
- Check the conditions for moving the transfer arm.

NOTE

2737	Arm slowdown condition not satisfies

DESCRIPTION
- The transfer arm failed to slow down.

CAUSE
- Lack of conditions required for slowing down the transfer arm.

SOLUTION
- Check the conditions for slowing down the transfer arm.

NOTE

2738	Rail up condition not satisfies

DESCRIPTION
- The rail failed to be moved up.

CAUSE
- Lack of conditions required for moving up the rail.

SOLUTION
- Check the conditions for moving up the rail.

NOTE

2739	Arm return condition not satisfies

DESCRIPTION
- The transfer arm failed to return.

CAUSE
- Lack of conditions required for returning the transfer arm

SOLUTION
- Check the conditions for returning the transfer arm.

NOTE

2748	Emergency stop switch ON safety stop

DESCRIPTION
- Emergency switch was detected.

CAUSE
- An emergency stop switch was pressed.

SOLUTION
- Release the emergency stop switch. (There are five switches. Front; 2 Rear; 3) If the same message appears after releasing the switch, the switch may be broken. Confirm emergency SW signal in the [Input check] of [Machine adjustment].

NOTE

2756	Axis related error

DESCRIPTION
- Axis fault detected.

CAUSE
- An axis error has occurred; however its factors cannot be determined.

SOLUTION
- Check the conditions of the time when the error occurred and the details of the error, and then contact us.

NOTE

2757	PCB recognition error (23)

DESCRIPTION
- PCB recognition error was detected.

CAUSE
- Invalid recognition parameter

SOLUTION
- Check for any abnormality in the recognition parameter.

NOTE

2758	PCB recognition error (16)

DESCRIPTION
- PCB recognition error was detected.

CAUSE
- Outline detection error occurred with the recognition hole.

SOLUTION
- Check the condition of the PCB hole.

NOTE

2759	PCB recognition error (17)

DESCRIPTION
- PCB recognition error was detected.

CAUSE
- Improper hole search area

SOLUTION
- Check the value of the search area size in the recognition initial setting. Check the condition of the target hole.

NOTE

2760	PCB recognition error (19)

DESCRIPTION
- PCB recognition error was detected.

CAUSE
- Scanned image is abnormal.

SOLUTION
- Check the camera for proper condition. Check the condition of the target hole.

NOTE

2761	PCB recognition error (45)

DESCRIPTION
- PCB recognition error was detected.

CAUSE
- Improper shape of the target hole

SOLUTION
- Check the condition of the target hole.

NOTE

2762	PCB recognition error (47)

DESCRIPTION
- PCB recognition error was detected.

CAUSE
- Improper diameter of the target hole

SOLUTION
- Check the condition of the target hole.

NOTE

2763	PCB recognition error (48)

DESCRIPTION
- PCB recognition error was detected.

CAUSE
- Improper area of the target hole

SOLUTION
- Check the condition (any burrs) of the target hole.

NOTE

2764	PCB recognition error

DESCRIPTION
- PCB recognition error was detected.

CAUSE
- Trouble occurred in PCB recognition.

SOLUTION
- Check the condition of the target hole.

NOTE

2765	PCB recognition error

DESCRIPTION
- PCB recognition error was detected.

CAUSE
- Trouble occurred in PCB recognition.

SOLUTION
- Check the condition of the target hole.

NOTE

2766	PCB recognition error

DESCRIPTION
- PCB recognition error was detected.

CAUSE
- Trouble occurred in PCB recognition.

SOLUTION
- Check the condition of the target hole.

NOTE

2767	PCB recognition error

DESCRIPTION
- PCB recognition error was detected.

CAUSE
- Trouble occurred in PCB recognition.

SOLUTION
- Check the condition of the target hole.

NOTE

4066	This is write protected disk. Please release write protect. Refer to Help for detail.

DESCRIPTION
- Unable to write signature to the floppy disk.

CAUSE
- Floppy disks formatted by old machine or unformatted disks require a signature.

SOLUTION
- Release write protect then operate again.

NOTE

4067	There is no signature on boot sector. Refer to Help for detail.

DESCRIPTION
- Access to unsigned floppy disk

CAUSE
- Unsigned floppy disk was used.

SOLUTION
- Reformat the floppy disk.

NOTE

9293	Driver soft interlock

DESCRIPTION
- Driver soft interlock occurred.

CAUSE
- Something is wrong with the software processing.

SOLUTION
- Check the conditions of the time when the error occurred, and the details of the error, and then contact us.

NOTE

9294	Soft task comm. Error

DESCRIPTION
- Soft task comm. Error occurred.

CAUSE
- Something is wrong with the software processing.

SOLUTION
- Check the conditions of the time when the error occurred, and the details of the error, and then contact us.

NOTE

9295	Soft calculation error

DESCRIPTION
- Soft calculation error occurred.

CAUSE
- Something is wrong with the software processing.

SOLUTION
- Check the conditions of the time when the error occurred, and the details of the error, and then contact us.

NOTE

9304	Motion incomplete

DESCRIPTION
- Axis motion is incomplete.

CAUSE
- Movement on the Table X-axis is not completed within a specified time.

SOLUTION
- Turn off the servo switch, and manually move the faulty axis. When the axis does not move smoothly, lubricate the ball screw.
- Move the faulty axis with a inching, and inform the manufacturer about its moving condition.

NOTE

9305	Soft parameter error

DESCRIPTION
- Axis motion is incomplete.

CAUSE
- Movement on the Table X-axis is not completed within a specified time.

SOLUTION
- Check the contents of invalid software parameter on the error screen and correct the production data or parameter data if necessary. In addition, inform us of the problem.

NOTE

9308	Soft overrun limit

DESCRIPTION
- Axis motion is incomplete.

CAUSE
- Movement on the axis is not completed within a specified time.

SOLUTION
- Check the axis where the error occurred on the error screen and correct the production data or parameter data if necessary. In addition, inform us of the problem.

HINT
- If the error occurred with the WH axis, there may be a problem in the lead wire diameter data in the parts data besides the parameter of the WH axis.

NOTE

9369	Exclusion process error

DESCRIPTION
- Exclusion process error occurred.

CAUSE
- Something is wrong with the software processing.

SOLUTION
- Check the conditions of the time when the error occurred, and the details of the error, and then contact us.

NOTE

9372	Position interrupt error

DESCRIPTION
- Position interrupt error occurred.

CAUSE
- An unnecessary interruption occurred during the positioning of XY-axes.

SOLUTION
- Restart the machine.
- If the error occurs again, contact us.

NOTE

9373	Complete interrupt error

DESCRIPTION
- Complete interrupt error occurred.

CAUSE
- An unnecessary interruption occurred during the positioning of XY-axes.

SOLUTION
- Restart the machine.
- If the error occurs again, contact us.

NOTE

9400	Axis error

DESCRIPTION
- Axis fault detected.

CAUSE
- An axis error has occurred; however, its factors cannot be determined.

SOLUTION
- Check the conditions of the time when the error occurred, and the details of the error, and then contact us.

NOTE

9801	Auto width power on error

DESCRIPTION
- Pulse motor system is turning off.

CAUSE
- Moving command was issued during pulse motor or the pulse motor driver of auto width axis was power off. The safety cover was opening or emergency stop was input pulse motor driver and the pulse motor was cut Power supply.

SOLUTION
- Please release the safety stop condition when machine is safety stop condition. Please contact our service section if machine is power off excluding the safety stop.

NOTE

9802	Auto width origin return incomplete

DESCRIPTION
- Before moving auto width it is necessary to return auto width origin.

CAUSE
- After power on, auto width axis never return origin at all.
- After cutting power of pulse motor drive or pulse motor, auto width axis never return origin at all because of the safety stop or the emergency stop input.

SOLUTION
- Please return auto width and operate it again.
- Please return the auto width after releasing the safety stop and operate it again.

NOTE

9803	Auto width positioning incomplete

DESCRIPTION
- Positioning command of the auto width was canceled.

CAUSE
- Next positioning command was issued before positioning is complete.

SOLUTION
- The operation situation is confirmed. Please contact our service section.

NOTE

9804	Auto width emergency stop input

DESCRIPTION
- Emergency stop was input while auto width running.

CAUSE
- The emergency stop switch (front: two/rear: three) is input.

SOLUTION
- Release emergency switch and release safety condition. Then operate again after origin return.

NOTE

9805	Auto width command error

DESCRIPTION
- The pulse control board detected the command error.

CAUSE
- The command that the pulse control board does not have was issued.

SOLUTION
- The operation situation is confirmed. Please contact our service section.

NOTE

9806	Auto width parameter error

DESCRIPTION
- The pulse control board detected the parameter error.

CAUSE
- The parameter against the command that the pulse control board does not have is set.
  E.g.: Although the parameter has 0 and 1, 2 was set.

SOLUTION
- The operation situation is confirmed. Please contact our service section.

NOTE

9807	Auto width communication error

DESCRIPTION
- The communication fault with the pulse control board.

CAUSE
- The communication checksum data from pulse control board is not correct.

SOLUTION
- The operation situation is confirmed. Please contact our service section.

NOTE

9809	Auto width origin abnormal

DESCRIPTION
- Auto width origin return was not normally completed.

CAUSE
- Return-to-origin was not complete within the specified period of time.
- Breakdown of origin return sensor.

SOLUTION
- Please confirm whether auto width axis moves smoothly.
- Please confirm whether the origin sensor correctly detects it.

NOTE

9812	Auto width + overrun error

DESCRIPTION
- + Overrun sensor for the auto width axis was activated.

CAUSE
- The + overrun sensor was shaded during the movement in a positive direction.

SOLUTION
- Check how the overrun sensor is attached and worked.

NOTE

9813	Auto width - over run error

DESCRIPTION
- - Overrun sensor for the auto width axis was activated.

CAUSE
- The - overrun sensor was shaded during the movement in a negative direction.

SOLUTION
- Check how the overrun sensor is attached and worked.

NOTE

Notice

The contents of this document are subject to change without prior notification.

For the products or the technology, which are controlled items subject to the Foreign Exchange and Foreign Trade Law, the export permission according to the law is required when exporting from Japan or providing technological offerings.

Panasonic Factory Solutions Co., Ltd.

441-13, Nagahasu, Tateishi-cho, Tosu, Saga 841-8585, Japan

TEL +81-942-84-2644

1375, Kamisukiawara, Showa-cho, Nakakoma-gun, Yamanashi 409-3895, Japan

TEL +81-55-275-6222

© 2008 Panasonic Factory Solutions Co., Ltd. All Rights Reserved.
Unauthorized copying and distribution is a violation of the law.

Printed in Japan